Labmaterial GmbH
Rosenweg 3
6072 Sachseln
+41 77 533 28 21
info@labmaterial.ch

Operating instructions Peristaltic pump small to medium flow volumes

BT100F-1



Labmaterial GmbH
Rosenweg 3
6072 Sachseln
+41 77 533 28 21
info@labmaterial.ch

Contents

1 Safety instructions 4
1.1 Danger 4
1.2 Warning 4
2 Introduction to the peristaltic pump 6
2.1 Applications 6
2.2 Functions and features 6
3 Components and interfaces 8
4 Control panel and keys 9
4.1 Keypad 9
4.2 Screen icons 10
4.3 Touchscreen 10
4.4 System menu 15
4.5 General parameters 16
4.6 Information and password 20
5 External control interface 24
6 Installation 26
6.1 Before commissioning 26
6.2 Installing the pump head and tubing 26
6.3 Mains connection 26
7 Operation 27
7.1 First startup and factory settings 27
7.2 Flow calibration 29
7.3 Operating wizard 31
7.4 Operating modes 33
7.4.1 Flow mode 34
7.4.2 Volume dispensing 34
7.4.3 Timed dispensing 35
7.4.4 Copy dispensing 36
7.5 External analogue control 36
7.6 Communication via RS485 and Modbus 39
7.7 Foot pedal control 41
8 Troubleshooting and maintenance 43
8.1 Manufacturer’s warranty and customer service 43
8.2 Drive spare parts 43

Labmaterial GmbH
Rosenweg 3
6072 Sachseln
+41 77 533 28 21
info@labmaterial.ch

8.3 Daily maintenance 43
8.4 Maintenance schedule 44
8.5 Troubleshooting 45
9 Dimensions 46
10 Ordering information 47
10.1 Optional accessories 47
11 Model designation 48
12 Technical data 49
13 Pump flow table 51
14 Suitable pump heads 53
15 Electrical data for control inputs and outputs 54
15.1 Digital inputs 54
15.2 Digital outputs 54
15.3 Analogue inputs 55
15.4 Internal auxiliary supply 55
15.5 External control circuit supply 55
16 Touchscreen calibration 56

Labmaterial GmbH
Rosenweg 3
6072 Sachseln
+41 77 533 28 21
info@labmaterial.ch

1 Safety instructions

⚠ **Important information: Read the operating instructions carefully before operating the pump.**

Symbol	Meaning
	Warning: Keep fingers away from moving parts.
	Warning: Caution.
	Warning: Caution, hot surface.
	Warning: Caution, electric shock hazard.
	Note: Recycle this product.
	Warning: Wear personal protective equipment.

Table 1 Safety symbols

1.1 Danger

⚠ Use the power supply specified on the device nameplate. Otherwise, the device may be damaged.

⚠ Do not dismantle the housing or modify the inside of the device yourself. This may cause malfunctions or electric shock.

Switch off the power before inserting or removing the pump tubing. Keep clear of the rotating rollers to prevent fingers or clothing from becoming caught in the mechanism.

⚠ Switch off the power before connecting or disconnecting external control devices to prevent electric shock or equipment damage.

⚠ The protective earth contact of the mains plug must always be properly grounded. Otherwise, there is a risk of electric shock, electromagnetic interference or induced electrostatic charge.

Special operating procedures must be established for each hazardous liquid being pumped. Personnel must be protected against injury during use.

⚠ This product is not suitable for potentially explosive atmospheres and must not be used in them.

1.2 Warning

Before use, check that the pumped liquid does not react chemically with the tubing or pump head. Otherwise, the tubing or pump head may be damaged. If in doubt, contact Labmaterial GmbH.

The tubing is a wear part and must be checked regularly. To the extent permitted by law, Leadfluid and Labmaterial GmbH accept no responsibility for losses resulting from tubing damage, particularly leaks of toxic, harmful or valuable liquids.

⚠ If actual environmental conditions exceed the technical specifications, for example temperature, humidity, acids, alkalis, organic solvents or other corrosive influences, dust or supply voltage, and this damages the device, the damage is not covered by the standard manufacturer's warranty. The manufacturer offers chargeable repairs in such cases.

⚠ Protection against injury from moving pump parts is primarily provided by the pump head safety device. Safety devices differ between pump head models. Refer to the section for the relevant pump head.

Labmaterial GmbH
Rosenweg 3
6072 Sachseln
+41 77 533 28 21
info@labmaterial.ch

⚠ If the restart function is enabled and the pump was running before a power failure, it may restart automatically when power is restored. Power Fail Restart is disabled at the factory; see Chapter 4.5.

Labmaterial GmbH
Rosenweg 3
6072 Sachseln
+41 77 533 28 21
info@labmaterial.ch

2 Introduction to the peristaltic pump

The peristaltic pump for small to medium flow volumes, model BT100F-1, has a colour LCD touchscreen and keys. It is used for dispensing various liquids and for continuous transfer. Four operating modes are available: flow mode, volume dispensing, timed dispensing and copy dispensing.

Operating principle: The tubing lies between the rollers and the pressure bed. Compression seals it at the contact point. The rotating rollers move this point forward. Behind a roller, the tubing returns to its original shape; the resulting vacuum draws in liquid. Before the first roller leaves the pressure bed, the next roller is already compressing the tubing. The liquid between the contact points is conveyed to the outlet. Only the inside wall of the tubing contacts the liquid. The compressed tubing acts as a valve; no separate valve is required for this pumping principle.

Volume dispensing calculates dispensing time from target volume and flow rate. Timed dispensing calculates volume from running time and flow rate. Copy dispensing divides a total volume into a defined number of portions. Controlled cooling reduces fan noise. The pump can be connected to computers, HMIs or PLCs via RS485 and MODBUS.

Drive	Flow range	Speed range
BT100F	0.00011–750mL/min	0.1–150rpm
BT100F-1	0.00011–1'650mL/min	0.1–150rpm; with DG10-8 maximum 100rpm
BT300F	0.005–1'750mL/min	0.1–350rpm
BT600F	0.005–3'000mL/min	0.1–600rpm

Table 2 Drives and flow ranges of the BT-F family

Technical references for other BT-F versions are identified by their drive. For our BT100F-1 configuration, refer to the ordering information in Chapter 10.

2.1 Applications

- The pump body does not come into contact with the liquid.
- No valve blockages; smooth tubing inner surface that is easy to clean.
- According to the manufacturer, the suction lift can reach 8m of water column.
- Low shear forces; suitable for transferring emulsions and liquids containing foam, cells and similar constituents.
- Suitable for liquids containing gas, magnetic beads or small suspended particles.
- Suitable for precise transfer and dispensing. Select the tubing diameter and filling rate to suit the application.
- Suitable for transferring liquids with a certain viscosity.
- The liquid comes into contact with the tubing only.
- With suitable food-grade or medical-grade tubing, the pump can be used for transfer and filling in corresponding applications. This product is not medically certified. If incorporated into a medical device, the medical device itself must hold the appropriate certification.
- Tubing made from special materials can be used for abrasive liquids.

2.2 Functions and features

- Colour LCD; operation via touchscreen and keys.
- Flow mode, volume dispensing, timed dispensing and copy dispensing.
- Five storable parameter groups in dispensing modes.

Labmaterial GmbH
Rosenweg 3
6072 Sachseln
+41 77 533 28 21
info@labmaterial.ch

- Forward and reverse rotation, start and stop, speed control and full speed.
- Flow display, flow control, cumulative liquid volume and flow calibration.
- Speed resolution 0.1rpm; speed error less than ±0.2%.
- Precise microstepping control; dispensing control reduces the effects of motor startup.
- High torque for multi-channel pump heads.
- Infrared remote control as an equipment-dependent option.
- An integrated expert system simplifies operation.
- Intelligent temperature control to reduce operating noise.
- External signals control start/stop and direction; the signals are optically isolated. Analogue speed control via 0–5V as standard, with 0–10V and 4–20mA depending on equipment.
- RS485 communication using the MODBUS protocol.
- Protective coating on the circuit board against dust and moisture; high interference immunity and wide-range power supply.
- 304 stainless steel housing. The manufacturer describes its resistance to various acids, alkalis, salts and organic solvents. The cleaning instructions in Chapter 8 must nevertheless be observed.
- High torque; configurations with several pump heads are possible.
- Optional foot pedal for triggering filling.

Labmaterial GmbH
Rosenweg 3
6072 Sachseln
+41 77 533 28 21
info@labmaterial.ch

3 Components and interfaces

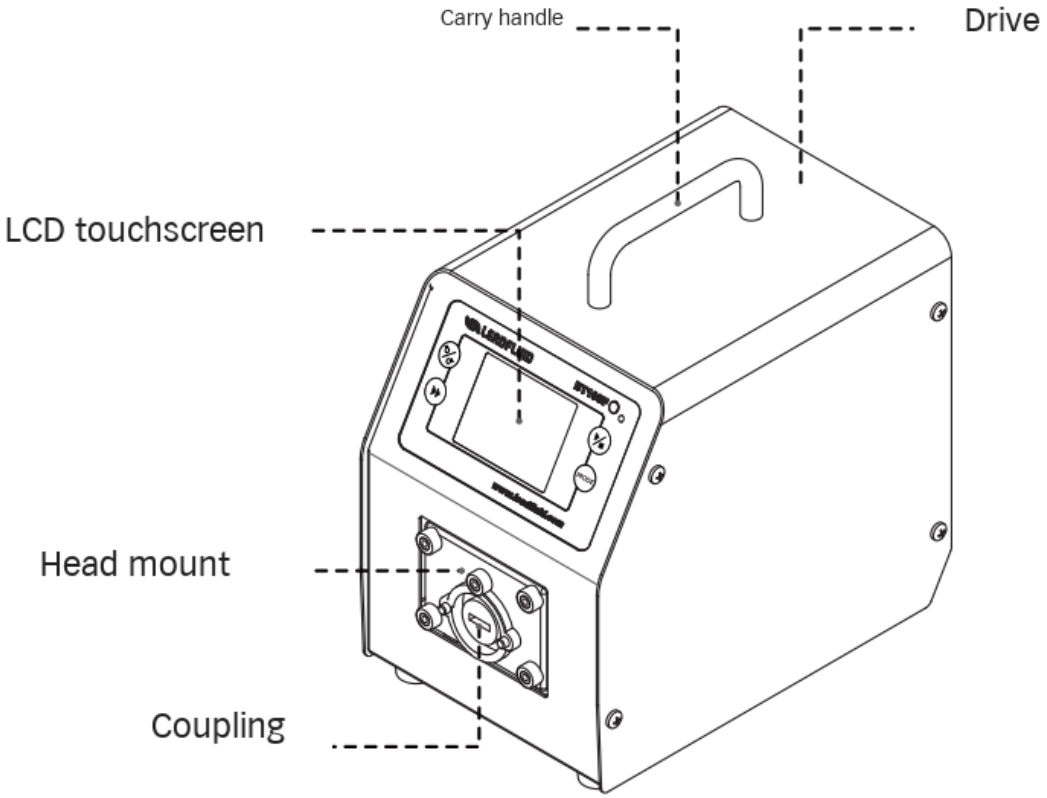

Figure 1 Components on the front of the BT-F drive

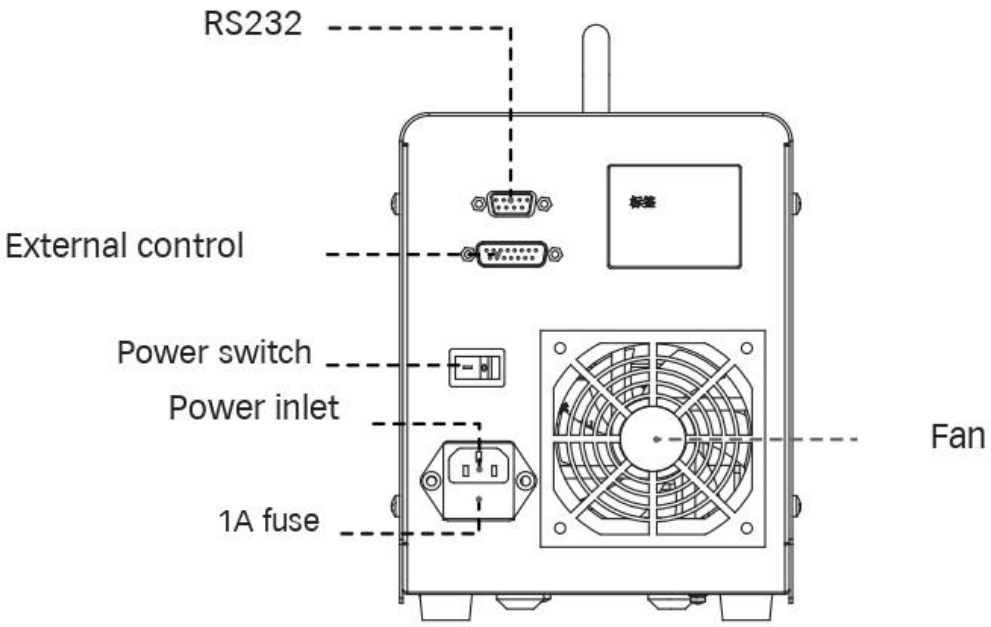

Figure 2 Components and connections on the rear of the BT-F drive

Labmaterial GmbH
Rosenweg 3
6072 Sachseln
+41 77 533 28 21
info@labmaterial.ch

4 Control panel and keys

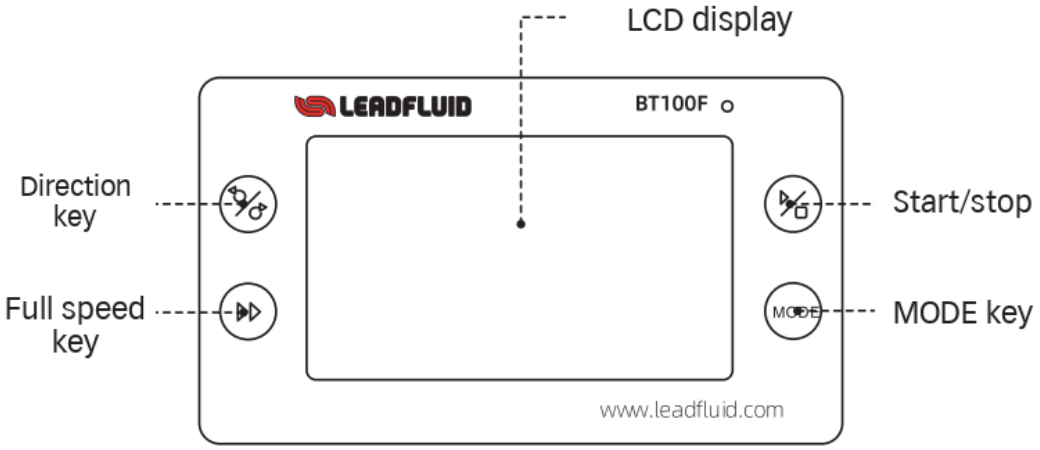

Figure 3 BT-F drive control panel

4.1 Keypad

Start/stop key: Starts or stops the pump.

Direction key: Switches between forward clockwise rotation and reverse counterclockwise rotation.

Full speed key: The pump runs at maximum speed. This function fills or empties the tubing. With a DG10 head, do not exceed 100rpm here either; first select DG10-8 as the pump head actually fitted.

MODE key: Change operating mode while the pump is stopped. When the device is locked, switch between the displayed information.

Labmaterial GmbH
Rosenweg 3
6072 Sachseln
+41 77 533 28 21
info@labmaterial.ch

4.2 Screen icons

Symbol	Function	Symbol	Function
	Sound off		Sound on
	Locked		Unlocked
	Internal control		Footswitch mode
	Current signal control		Voltage signal control
	Communication connected		Communication disconnected
	Clockwise		Counterclockwise
	Quick settings		System menu
	Decrease		Increase

Table 3 Description of screen icons

4.3 Touchscreen

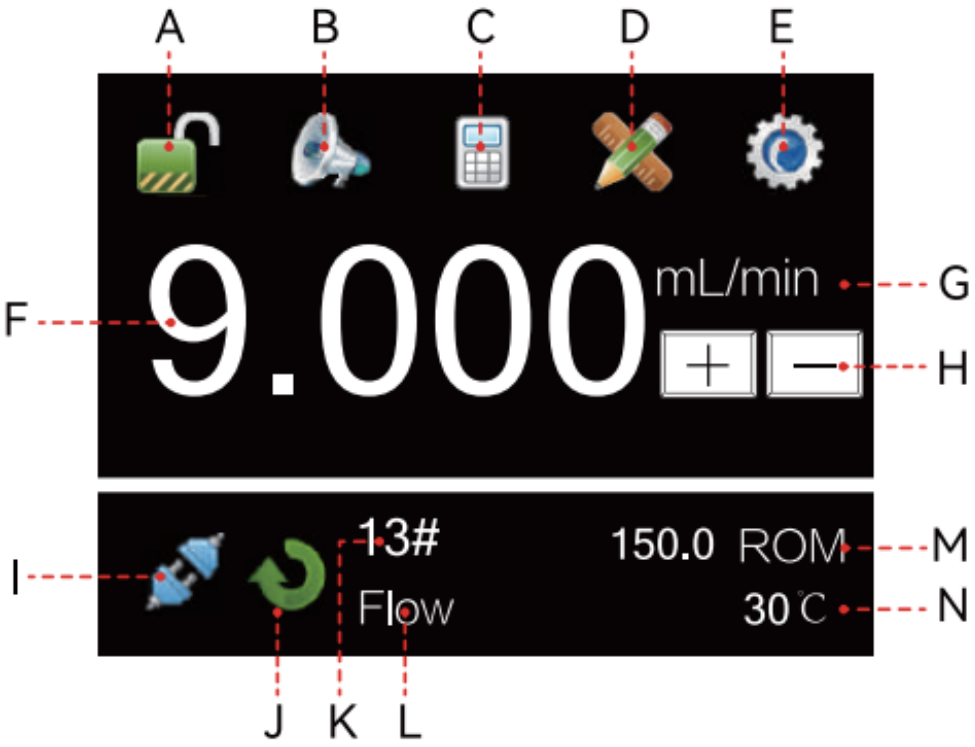

Figure 4 Touchscreen with display areas labelled A to N

Labmaterial GmbH
Rosenweg 3
6072 Sachseln
+41 77 533 28 21
info@labmaterial.ch

A Lock status: When the device is locked, the control method and system parameters cannot be changed. Tap the icon to switch between locking and unlocking. The correct password is required to unlock it.



Figure 5 Unlocked and locked states

B Sound status: Switch notification and key sounds on or off.



Figure 6 Sound on and off

C Control method: The icon opens the selection of four control methods.

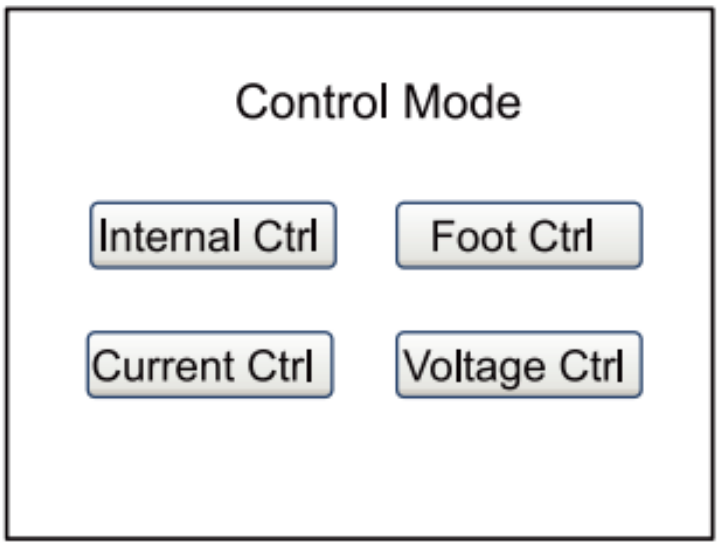

Figure 7 Selecting the control method

- Internal control: Keys and touchscreen control the pump.
- Foot pedal control: The pedal controls start/stop; other parameters are set using the keys and touchscreen.
- Current control: An external 4–20mA signal controls flow rate; external signals control start/stop and direction. The control keys have no effect in this control method. This function is optional.

Labmaterial GmbH
Rosenweg 3
6072 Sachseln
+41 77 533 28 21
info@labmaterial.ch

- Voltage control: An external 0–5V or 0–10V signal controls flow rate; external signals control start/stop and direction. The control keys have no effect in this control method. 0–5V is standard; 0–10V is optional.



Figure 8 Icons for the four control methods

D Quick settings: The icon opens quick settings. Pause time can be expressed in seconds, minutes or hours. The cumulative liquid volume and cycle count can be reset to zero.



Figure 9 Quick settings icon

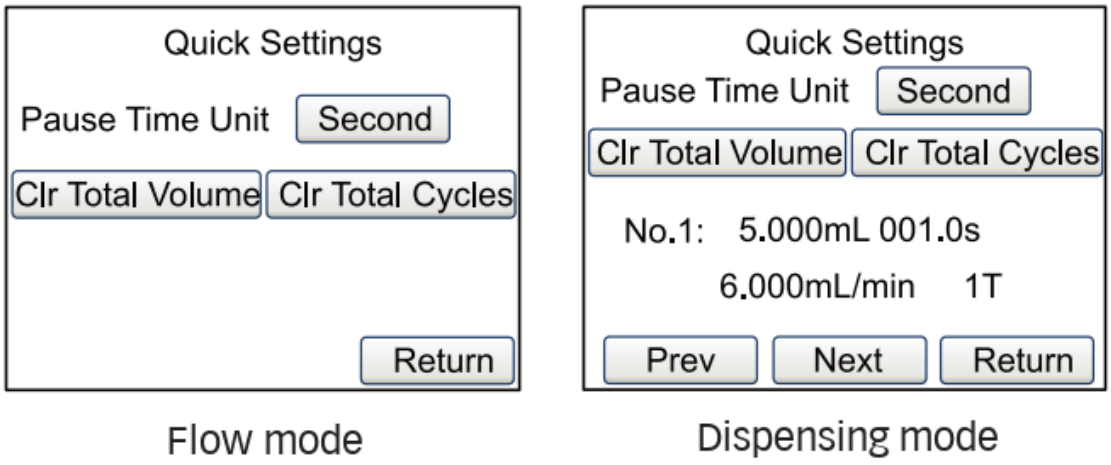

Figure 10 Quick settings in flow and dispensing modes

In dispensing modes, this also switches between saved parameter groups. Select the group with Prev and Next and return with Return.

E System menu: The icon opens the system menu containing parameters and wizards.



Figure 11 System menu icon

Labmaterial GmbH
Rosenweg 3
6072 Sachseln
+41 77 533 28 21
info@labmaterial.ch

F Flow setting: Tap the displayed numerical value while the pump is stopped. Enter the new value in the input window; observe the permitted range and unit.

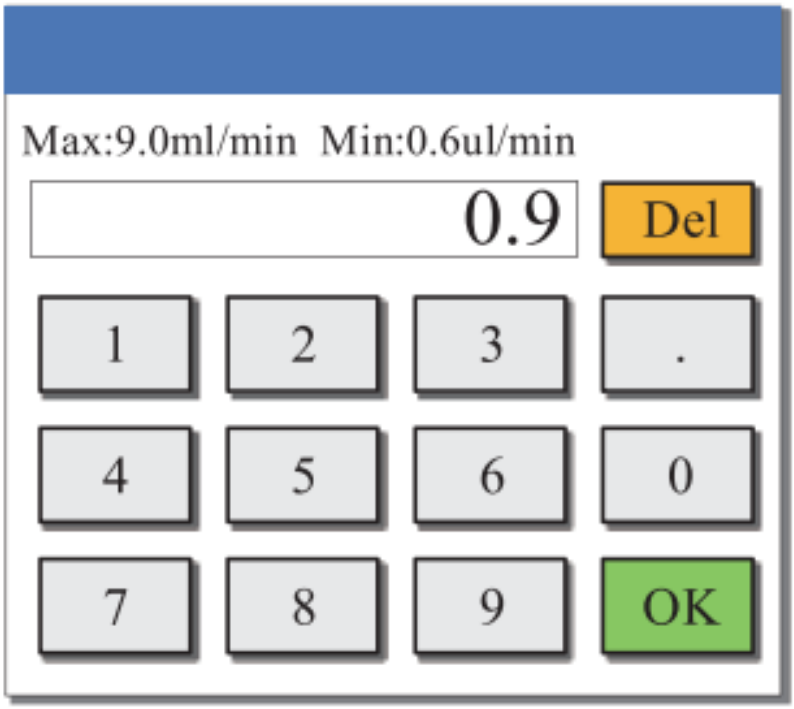

Figure 12 Flow rate input window

⚠ **Note:** The flow must be calibrated for an accurate flow display.

G Flow unit: Tap the unit field while the pump is stopped to switch between µL/min and mL/min.

H Fine adjustment: Use plus or minus to increase or decrease flow by the smallest increment during operation. Holding the key for at least one second changes the value faster.



Figure 13 Keys for increasing and decreasing flow

I Communication status: Indicates whether communication is connected or disconnected.

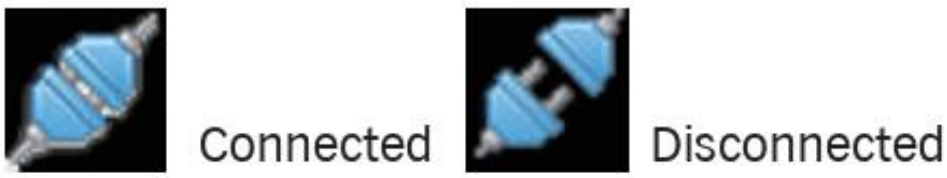

Figure 14 Communication status

Labmaterial GmbH
Rosenweg 3
6072 Sachseln
+41 77 533 28 21
info@labmaterial.ch

J Direction of rotation: The selected direction is displayed when stopped. During operation, an animation shows the direction of rotation.



Figure 15 Direction of rotation when stopped



Figure 16 Example of the running clockwise direction animation

K Tubing or pump head: Displays the selected tubing size or head model. When locked, use MODE to switch between the information. 17# means tubing size #17; ID 0.13 means an internal diameter of 0.13mm; YZ15 identifies the pump head.

L Operating mode: Displays flow mode, volume dispensing, timed dispensing or copy dispensing.

M Speed or cycle count: Displays the current speed or number of completed doses. When locked, switch with MODE. Overflow appears above the maximum speed; Underflow appears below the minimum. Reset the cycle counter in quick settings.

N Temperature or total volume: Displays the drive's internal temperature or the total volume transferred. When locked, switch with MODE. Reset the total volume in quick settings.

Labmaterial GmbH
Rosenweg 3
6072 Sachseln
+41 77 533 28 21
info@labmaterial.ch

4.4 System menu

Open the system menu while the pump is stopped.



Figure 17 System menu

Wizard: After the requirements have been entered, the operating wizard recommends suitable pump heads and tubing; see Chapter 7.3.

Calibrate: The calibration wizard matches the volume measured with a balance or measuring cylinder to the displayed flow rate; see Chapter 7.2.

Setup: Open general parameters; swipe up or down to display further entries.

Labmaterial GmbH
Rosenweg 3
6072 Sachseln
+41 77 533 28 21
info@labmaterial.ch

4.5 General parameters

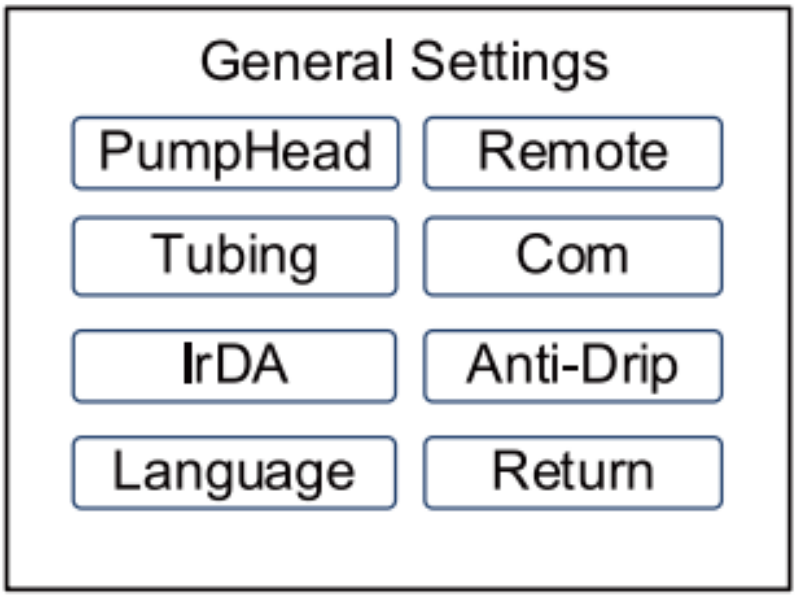

Figure 18 General parameters

Select pump head: Select the pump head model actually installed. Swipe up or down to display more models.

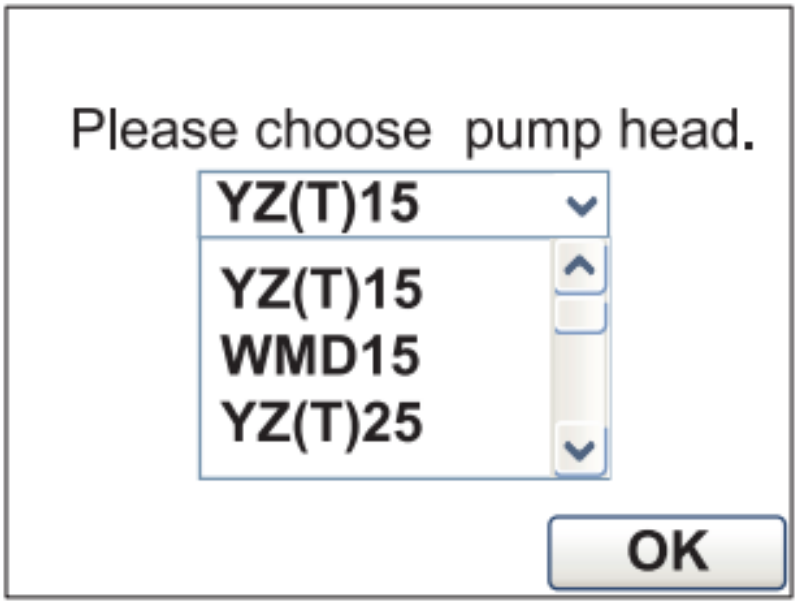

Figure 19 Selecting the pump head

When DG or DT10 heads are selected, the system limits maximum speed to 100rpm. This menu function does not approve arbitrary head/drive combinations. The corresponding head applies to the supplied configuration.

Labmaterial GmbH
Rosenweg 3
6072 Sachseln
+41 77 533 28 21
info@labmaterial.ch

Select tubing: Select the tubing actually fitted and suitable for the head. Each head has its own set of compatible tubing sizes.

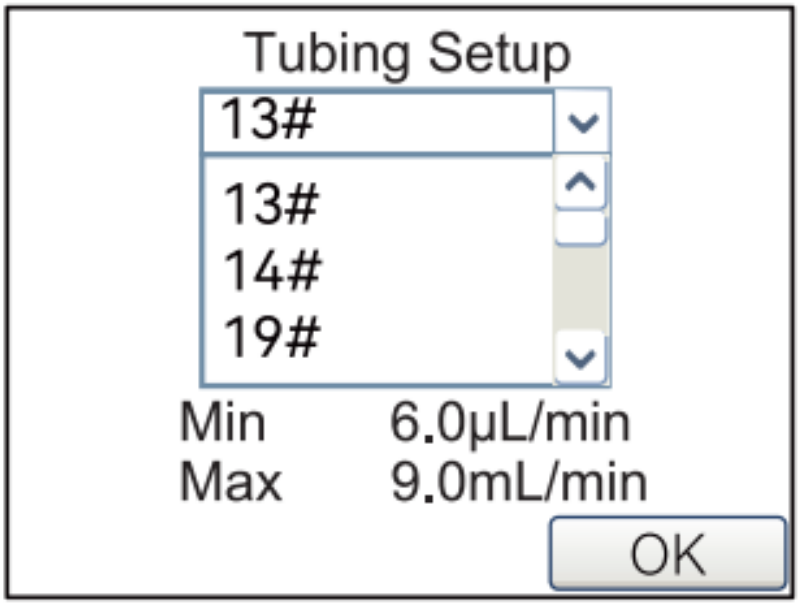

Figure 20 Selecting the tubing

Further settings: Enable or disable infrared remote control and restart after power failure. Infrared control requires the corresponding equipment. Power Fail Restart is disabled at the factory. Once enabled, the pump returns to its pre-failure state when power is restored.

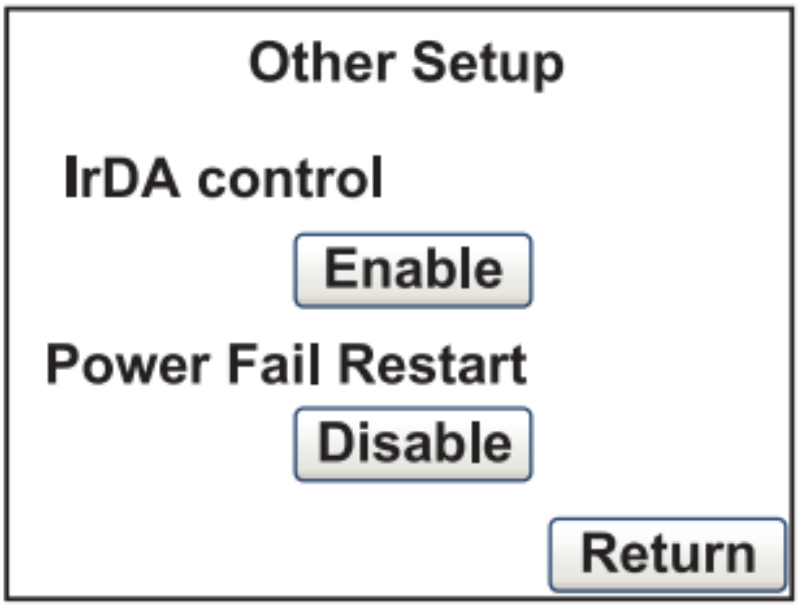

Figure 21 Setting infrared control and restart

Labmaterial GmbH
Rosenweg 3
6072 Sachseln
+41 77 533 28 21
info@labmaterial.ch

Device language: Select Chinese or English.



Figure 22 Selecting the device language

External direction control: Select level or pulse control. With level control, the applied high or low level determines direction. With pulse control, the edge when changing between levels is evaluated, for example with a momentary pushbutton. This setting applies to external control mode. The Analog Ratio field shows the selected analogue ratio.

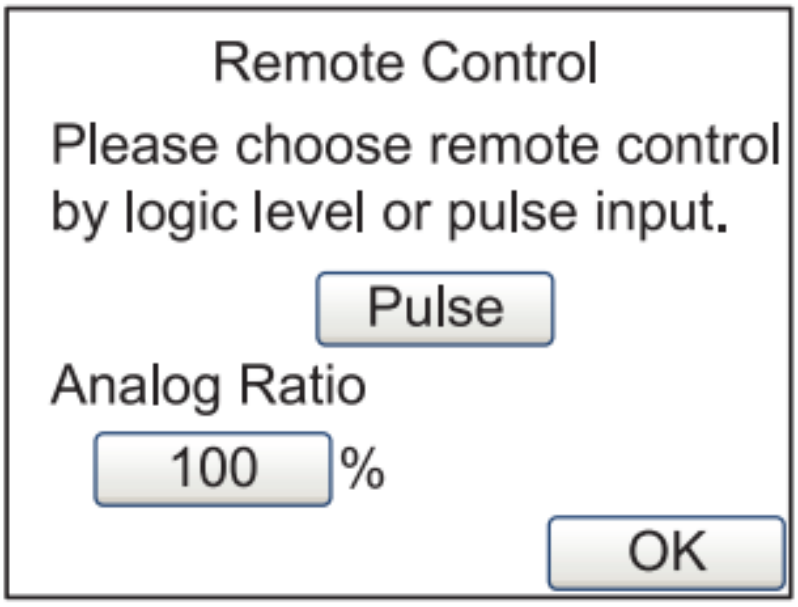

Figure 23 Setting external control

Labmaterial GmbH
Rosenweg 3
6072 Sachseln
+41 77 533 28 21
info@labmaterial.ch

Communication: Select baud rate and tap to change parity and byte order. Tap the pump address and enter the required value. After a change, switch the pump off and on again for the settings to take effect.

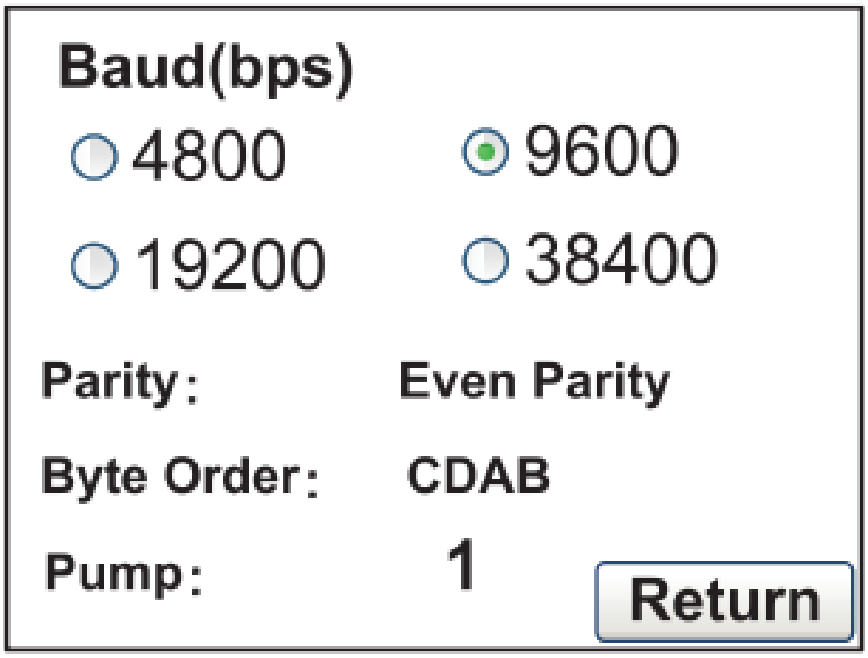

Figure 24 Communication settings

Anti-drip: After stopping, the motor can rotate backwards through a set angle to draw liquid back into the tubing. In the Anti-Drip menu, set deceleration time, reverse angle and reverse speed. An angle of 0 disables reverse motion. Select values to suit the application.

Deceleration time when stopping: In volume and copy dispensing modes, this is the time between receipt of the stop signal and actual standstill. Adjusting deceleration can reduce splashing during filling.

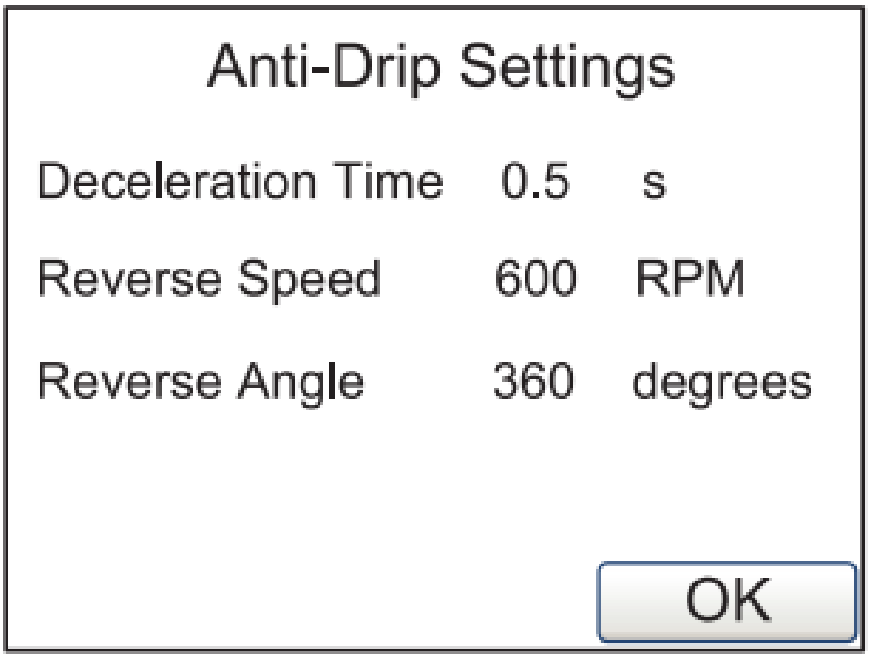

Figure 25 Setting reverse motion and stopping deceleration

Labmaterial GmbH
Rosenweg 3
6072 Sachseln
+41 77 533 28 21
info@labmaterial.ch

4.6 Information and password

Info: Open the menu for flow curves, system information, operating data, factory settings and password.

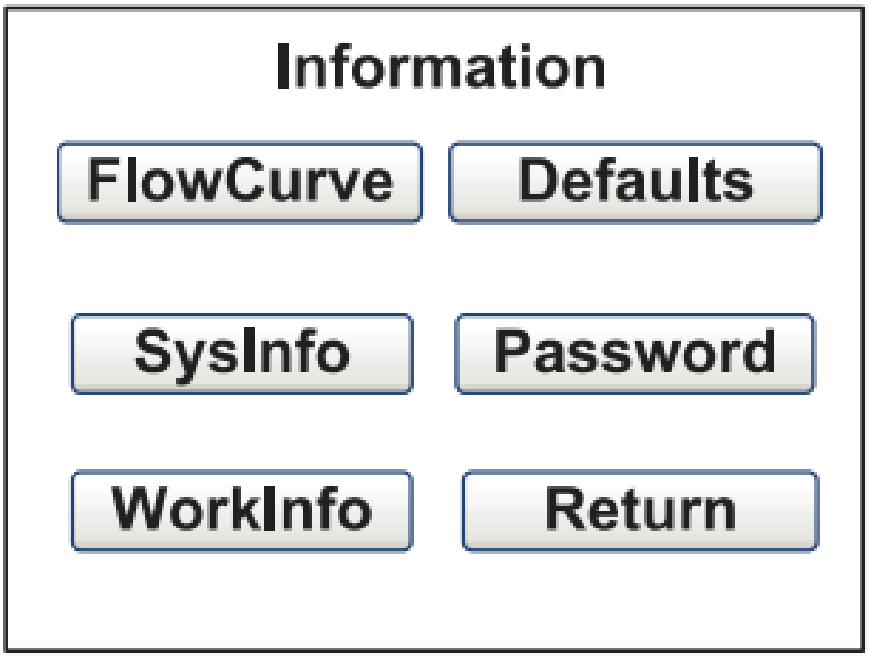

Figure 26 Information menu

Labmaterial GmbH
Rosenweg 3
6072 Sachseln
+41 77 533 28 21
info@labmaterial.ch

FlowCurve: Displays flow curves for different pump heads. The display does not replace calibration on the actual setup. A maximum operating speed of 100rpm also applies to DG10 heads for the curves shown.

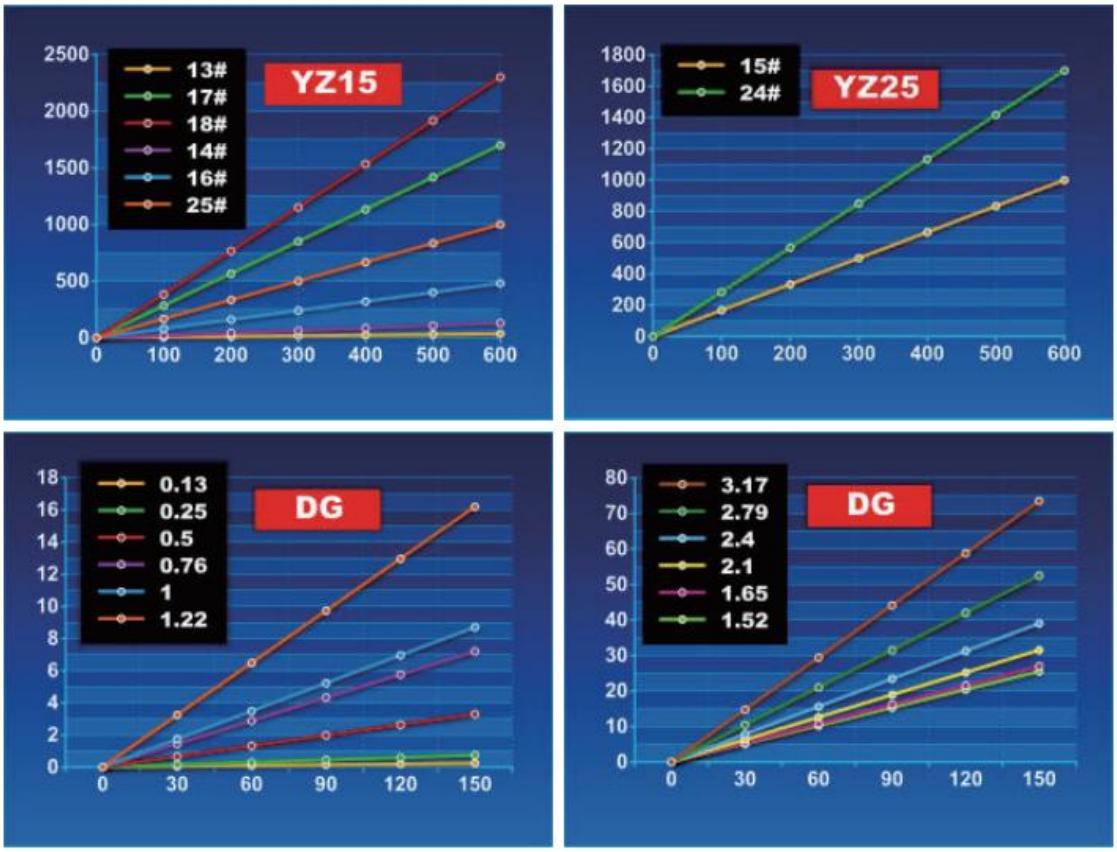

Figure 27 Flow curves stored in the device

SysInfo: Displays software version, memory, speed resolution and internal temperature.

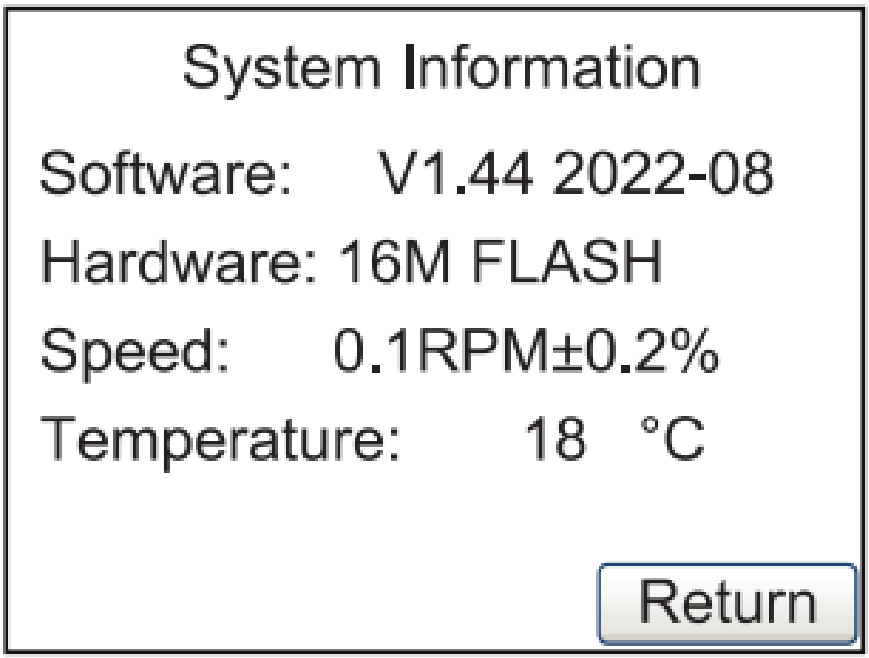

Figure 28 System information

Labmaterial GmbH
Rosenweg 3
6072 Sachseln
+41 77 533 28 21
info@labmaterial.ch

WorkInfo: Displays power-on time, running time, power-on count and serial number.

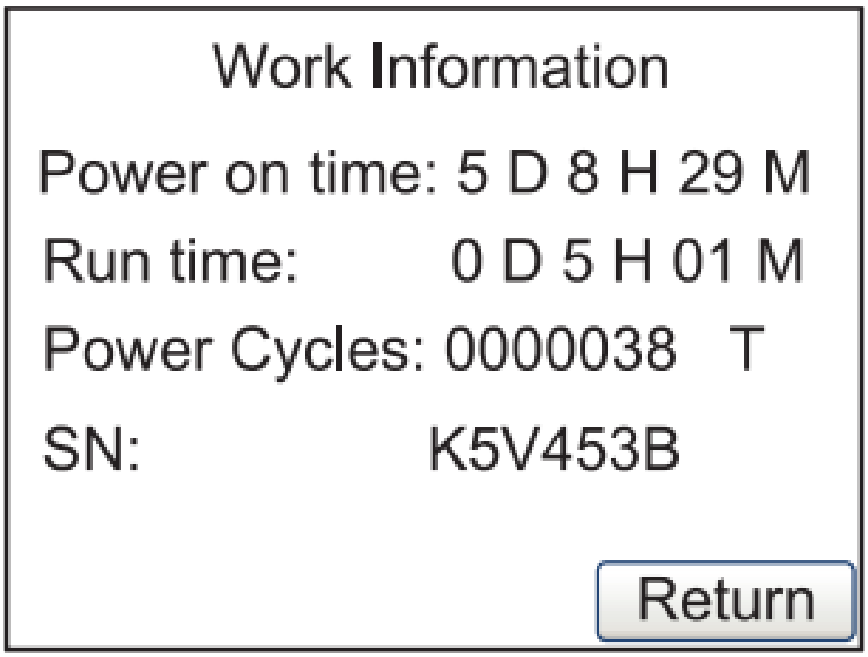

Figure 29 Operating information

Defaults: Reset all parameters to factory settings. Then switch off and on again. Alternatively, with the power off, hold down the direction key and MODE key and switch on the device. Once the main screen starts normally, factory settings have been restored.

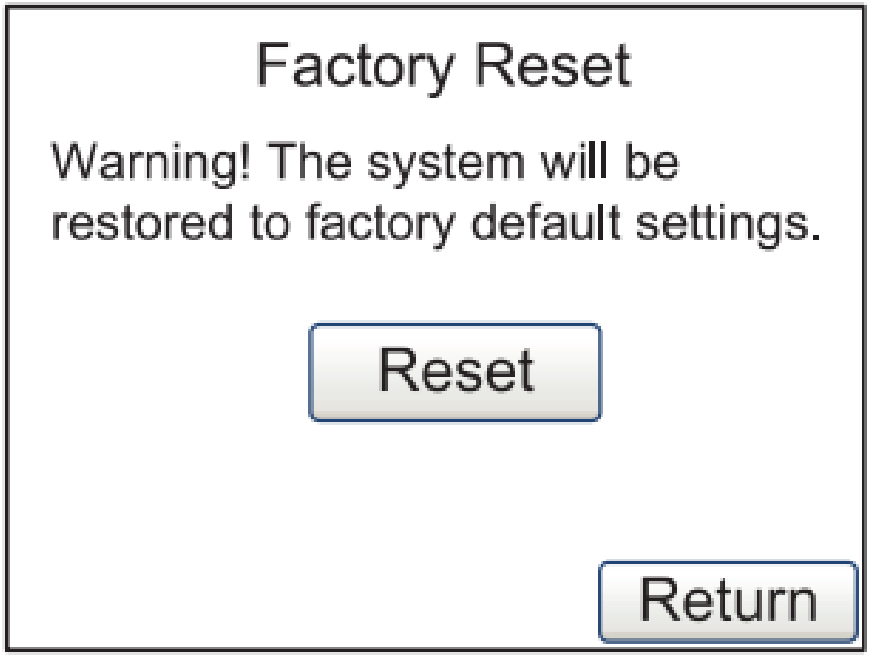

Figure 30 Restoring factory settings

Labmaterial GmbH
Rosenweg 3
6072 Sachseln
+41 77 533 28 21
info@labmaterial.ch

Password: No password is set at the factory. After entering the current password, the password can be changed. Before the first entry, the input window is displayed.

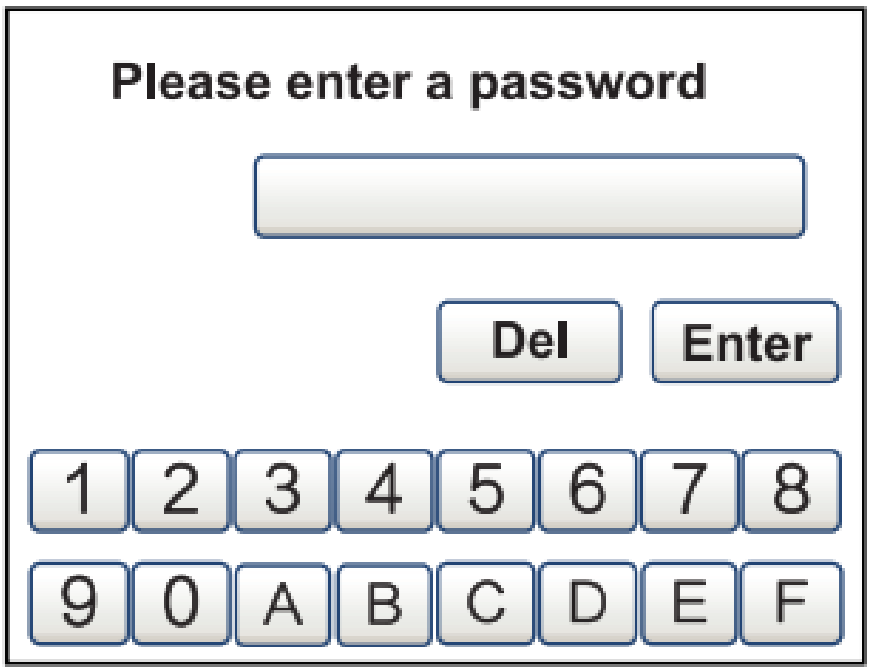

Figure 31 Entering the password

Enter the password and confirm with Enter. Open the password menu again, enter the new password and save with Set.

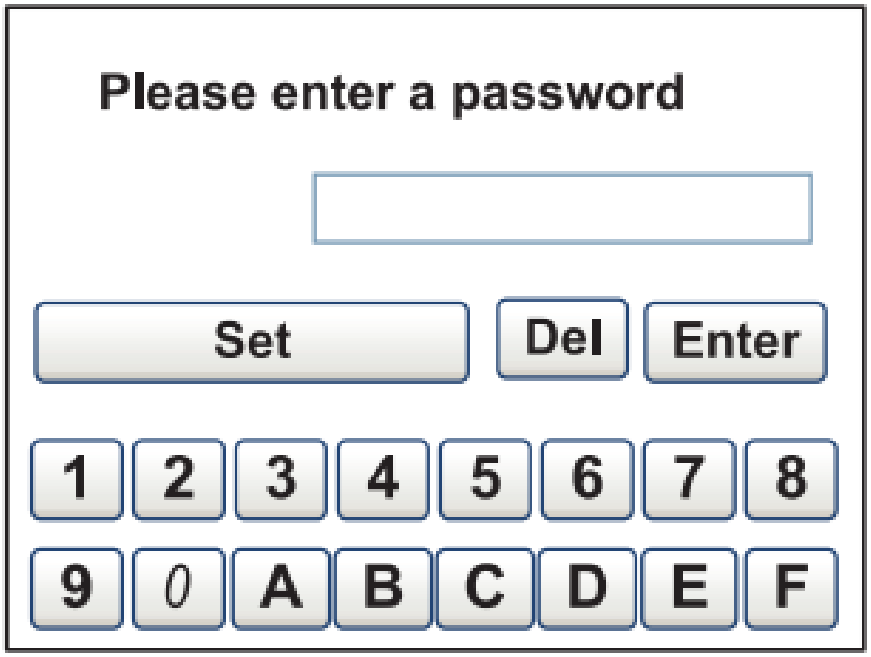

Figure 32 Changing the password

If the password is forgotten, contact Labmaterial GmbH for resetting or recovery.

About: Displays contact details and a brief introduction to Leadfluid.

Return: Return to the main menu.

Labmaterial GmbH
Rosenweg 3
6072 Sachseln
+41 77 533 28 21
info@labmaterial.ch

5 External control interface

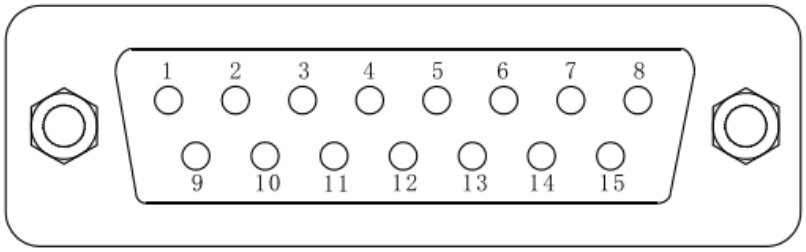

Figure 33 DB15 connector numbering

DB15 pin	Signal	Description
1	ADC_W	Positive external analogue signal input
2	B	RS485 communication line B
3	A	RS485 communication line A
4	VCC_W	External DC supply input
5	DAC	Analogue voltage signal output
6	CW_W	External direction input
7	PWM	Pulse signal output
8	COM	Common connection for external signals
9	AGND	Negative external analogue signal input
10	+12V	Positive connection of the internal 12V supply
11	GND	Internal supply ground
12	CW	Internal direction status output
13	RS_W	External start/stop input
14	PWM_W	External pulse signal input
15	RS	Internal start/stop status output

Table 4 External control connector pin assignments

Labmaterial GmbH
Rosenweg 3
6072 Sachseln
+41 77 533 28 21
info@labmaterial.ch

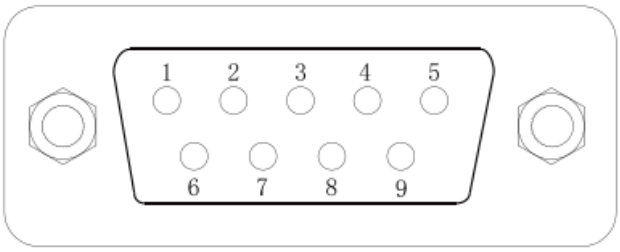

Figure 34 DB9 connector numbering

DB9 pin	Signal	Description
1	—	—
2	RXD	Receive data
3	TXD	Transmit data
4	—	—
5	GND	Signal ground
6	—	—
7	—	—
8	—	—
9	—	—

Table 5 RS232 connector pin assignments

⚠ **Note:** Do not connect mains voltage to the external control connector. Apply only the signals shown in the connection diagrams to the corresponding pins. Do not exceed the permitted signal ranges or apply supply voltage to other pins. Otherwise, permanent damage not covered by the manufacturer's warranty may occur.

⚠ **Note:** Low-voltage signals must be separated from the mains supply. Use a separate shielded ground wire.

⚠ **Note:** Use suitable ferrules on the ends of stranded wires. Otherwise, equipment damage may occur.

Labmaterial GmbH
Rosenweg 3
6072 Sachseln
+41 77 533 28 21
info@labmaterial.ch

6 Installation

6.1 Before commissioning

- When unpacking, check against the packing list that all accessories are complete, correct and undamaged. Contact Labmaterial GmbH immediately if anything is wrong.
- Read the operating instructions carefully and keep them accessible for future reference.
- Place the pump on a level surface. Leave at least 20cm clearance behind the pump.

6.2 Installing the pump head and tubing

For the supplied DG10-8 head, follow the corresponding DG installation instructions. Set a maximum of 100rpm with this head. The tubing must match the head size, lie without tension and the head must be fully closed before operation. Disconnect the pump from the mains before installation, tubing replacement or opening the head cover.

YZ15/YZ25 installation example: Align the flat shaft of the pump head with the slot in the drive coupling and insert it. Rotate the head until its screw holes align with the holes in the head support. Seat it fully, insert the two mounting screws and tighten them. Open the head lever, insert the tubing smoothly and align it straight. Move the lever in the opposite direction to the horizontal position and close the head.

Installing the DG multi-channel head: Align the flat shaft of the pump head with the slot in the drive coupling and insert it. Rotate the head until the locating hole on its rear aligns with the locating pin on the drive's head support. Seat the head fully on the support. Insert the two socket-head screws into the mounting holes inside the head and tighten them.

Lay the tubing smoothly in the cassette and align it straight. Slide the tubing clamps at both ends into the retaining grooves. First hook the left end of the cassette into the head's round guide rail, then snap the other end into the rectangular guide rail.

The installation steps described apply to the head models named in each case. Do not transfer their mechanical arrangements to other heads without checking.

6.3 Mains connection

Rated supply: 230V, 50/60Hz. Plug the supplied mains cable into the power inlet on the rear of the drive.

⚠ **Note:** All supply cables must be rated for the device's power consumption.
⚠ **Note:** Position the pump so it can easily be disconnected from the power supply during use.
⚠ **Note:** The power supply must match the nameplate specification. Otherwise, the device may be damaged.

Labmaterial GmbH
Rosenweg 3
6072 Sachseln
+41 77 533 28 21
info@labmaterial.ch

7 Operation

7.1 First startup and factory settings

The pump has preset operating parameters. Before first use, set the pump head and tubing to match the actual setup and calibrate flow.

Parameter	Factory setting
Password	Blank
Notification sound	Enabled
Operating mode	Flow mode
Control method	Internal control
Flow setpoint	60µL/min
Speed	1.0rpm
Direction of rotation	Counterclockwise
Pump head	YZ(T)15
Tubing	#13
Stopping deceleration time	0.5s
Reverse angle	0°, disabled
Reverse speed	50rpm
Baud rate	9'600bit/s
Parity	Even
Byte order	CDAB
External direction control	Pulse signal
Analogue ratio	100%
Infrared remote control	Setting enabled; corresponding equipment required
Restart after power failure	Disabled

Table 6 Device factory settings

Labmaterial GmbH
Rosenweg 3
6072 Sachseln
+41 77 533 28 21
info@labmaterial.ch

At first power-on or after restoring factory settings, language selection appears first. The initial setup wizard then guides you through pump head, tubing, anti-drip, operating mode and calibration. Once setup is complete, this sequence is not repeated at the next power-on.

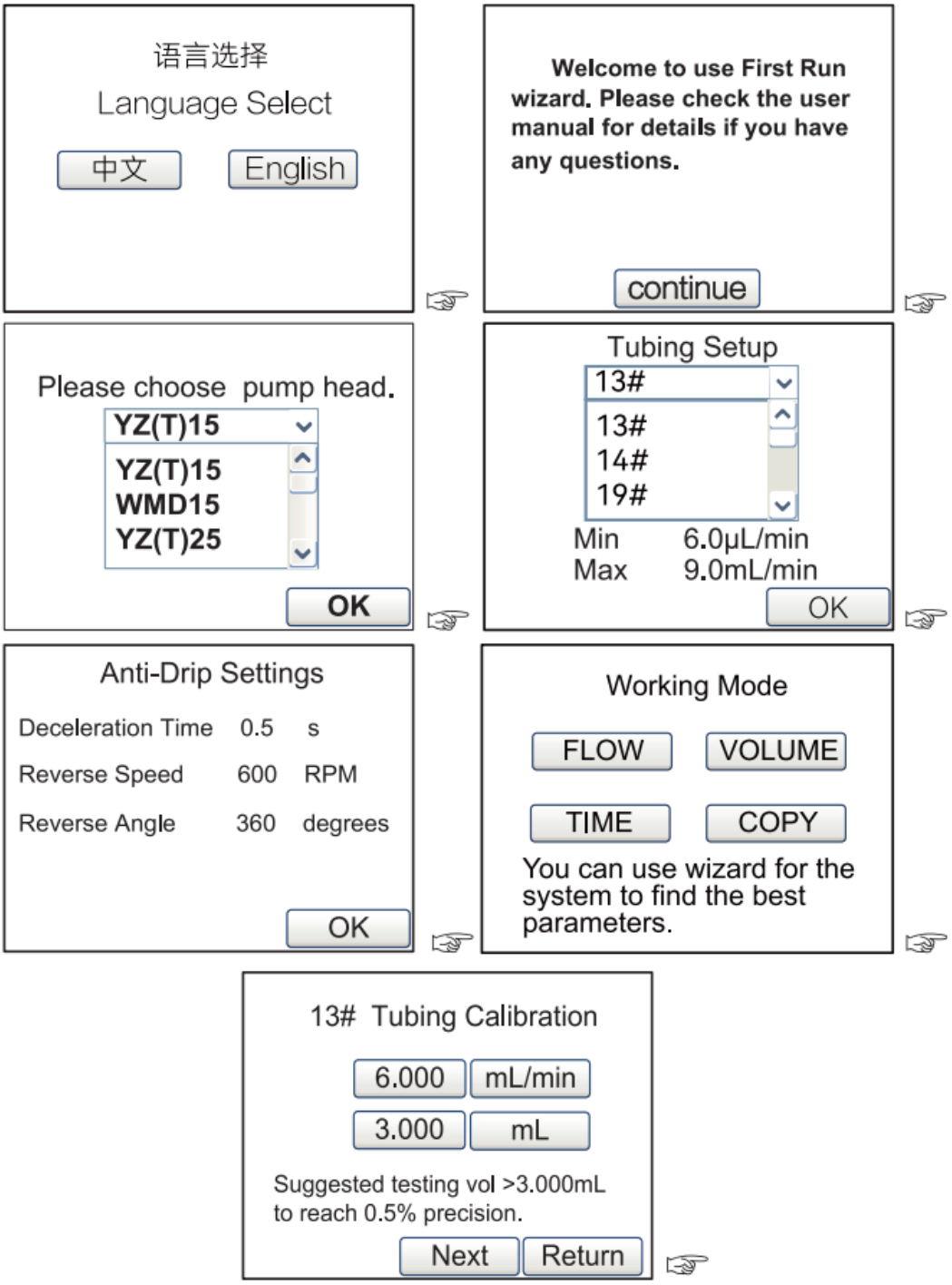

Figure 35 Initial setup wizard

Labmaterial GmbH
Rosenweg 3
6072 Sachseln
+41 77 533 28 21
info@labmaterial.ch

7.2 Flow calibration

Determine the actual volume transferred with a balance or measuring cylinder and use it to calibrate pump flow. Calibrate in the following cases:

- First startup.
- Changing the pump head or tubing.
- Transfer of the same liquid with two pump heads.
- Reinserting the tubing.
- Prolonged continuous operation.

1. Install the pump head and tubing. Prepare a suitable balance or graduated cylinder and a collecting vessel.
2. In general parameters, select the pump head and tubing actually used; see Chapter 4.5.
3. Use the full speed key to fill the tubing completely with liquid.
4. With the pump stopped, open the system menu and the Calibrate calibration wizard .
5. Check tubing model, test flow rate and test volume. Tap numerical values and units to change them. The example displays 6.000mL/min and 3.000mL; these are example values. Select Next to proceed to measurement; Return exits the wizard without calibration.

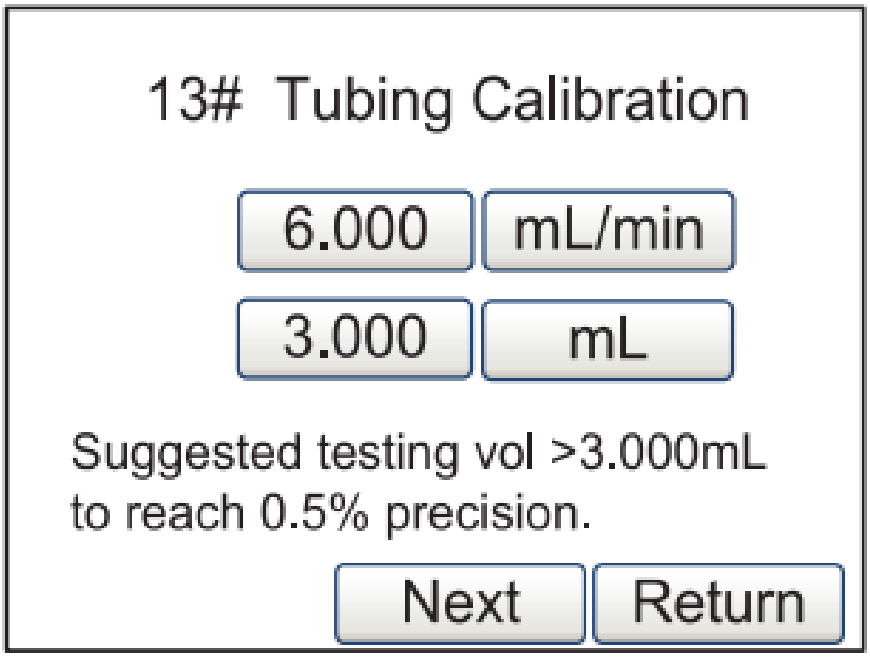

Figure 36 Setting calibration flow rate and test volume

⚠ **Note:** In flow mode, use at least the test volume recommended by the system. For volume dispensing, preferably calibrate with the actual filling volume. The screen indication of achievable precision is not a general accuracy guarantee for every tube and liquid.

6. Make sure the tubing is completely filled. Press START/STOP . The pump performs the test and stops automatically after the specified delivery operation. Measure the transferred volume and enter it with the correct unit under Test1. Repeat for Test2 and Test3. Then select Next to calculate. Prev allows the flow rate and test volume to be changed; Return exits the wizard.

Labmaterial GmbH
Rosenweg 3
6072 Sachseln
+41 77 533 28 21
info@labmaterial.ch

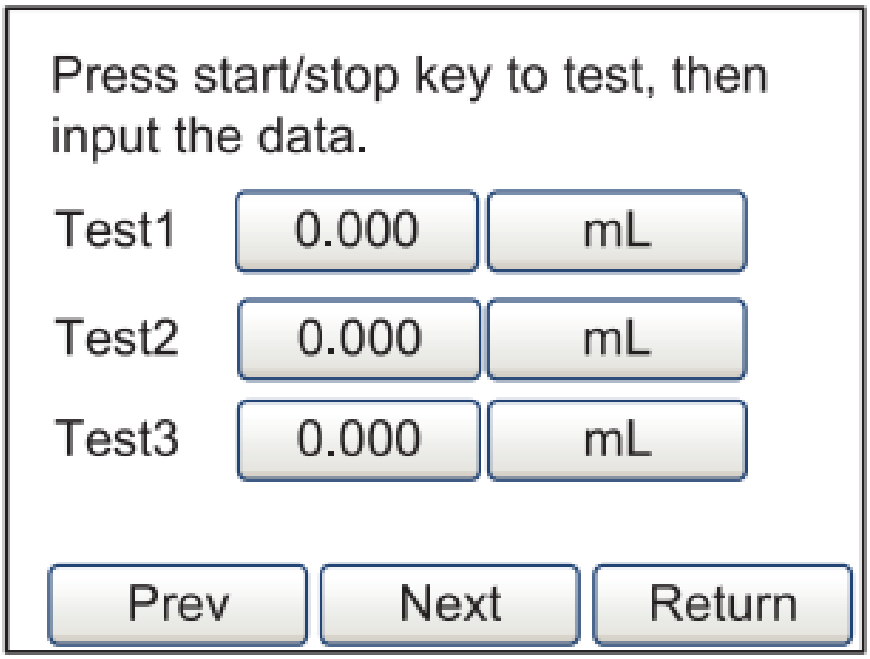

Figure 37 Measuring and entering actual delivery

⚠ **Note:** START/STOP can interrupt a test early if needed. Pressing the key again restarts the test. One or more measured values can be entered; the system calculates their average.

7. The system calculates the new correction factor and displays the previous factor for comparison. If the difference exceeds a factor of two, check in particular for measurement errors, incorrect units, incorrect head/tubing settings, high viscosity and use of two heads. If the factor is plausible, save with OK. Use Retry to test again; Return exits without saving the new factor.

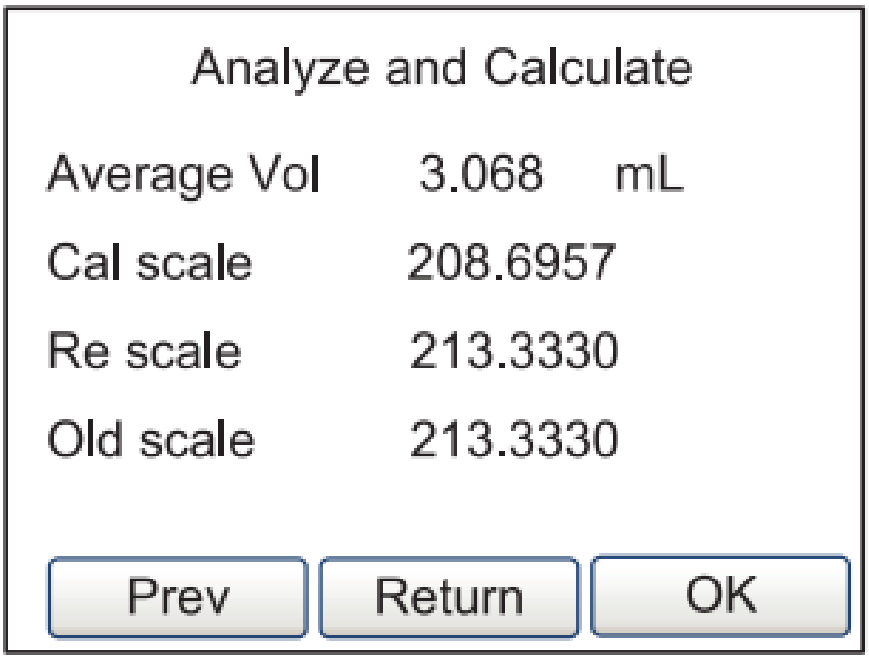

Figure 38 Calibration calculation result

Labmaterial GmbH
Rosenweg 3
6072 Sachseln
+41 77 533 28 21
info@labmaterial.ch

If no measurement data has been entered, the following screen appears. Use Prev or Retry to return to measurement and enter data.

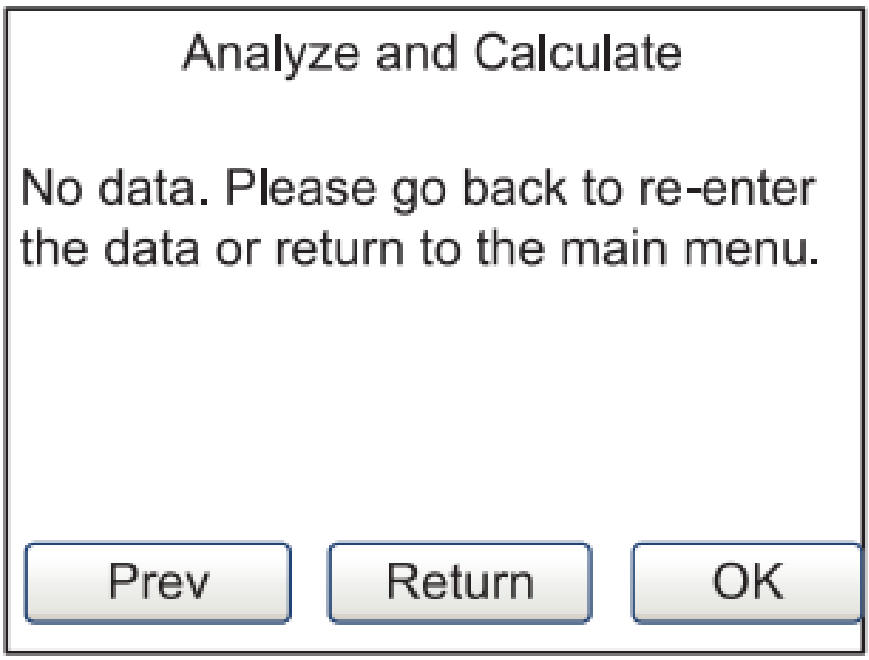

Figure 39 Calibration without entered measurement data

7.3 Operating wizard

After the required flow rate or dispensing parameters are entered, the operating wizard recommends suitable heads and tubing.

1. With the pump stopped, open the system menu and Wizard.
2. Select Next on the welcome page; Return takes you back to the system menu.

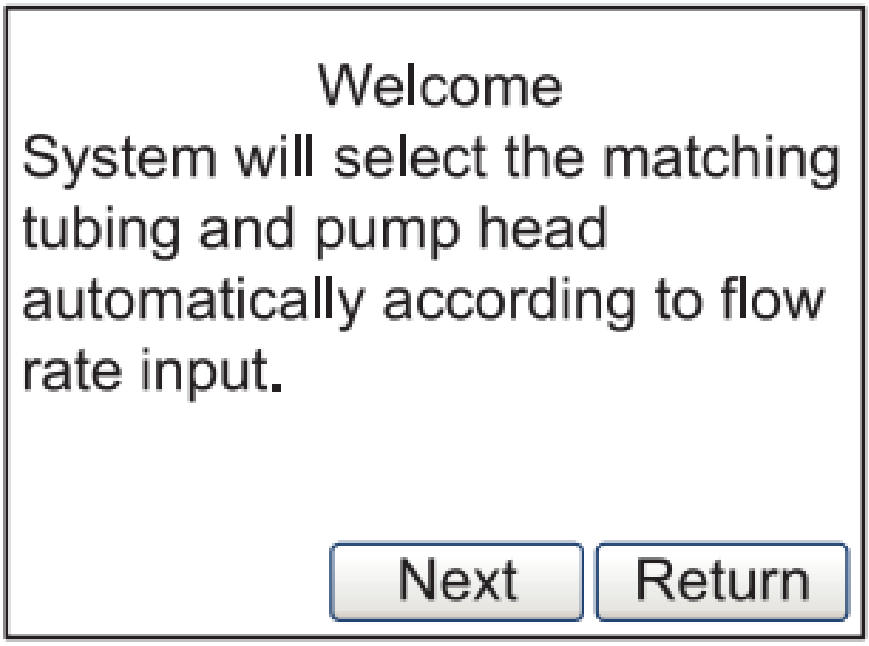

Figure 40 Operating wizard welcome page

Labmaterial GmbH
Rosenweg 3
6072 Sachseln
+41 77 533 28 21
info@labmaterial.ch

3. Enter the required parameters, paying particular attention to units. In flow mode, enter the required range. For volume and timed dispensing, enter volume and running time. In copy mode, enter total volume, number of portions and duration per portion.

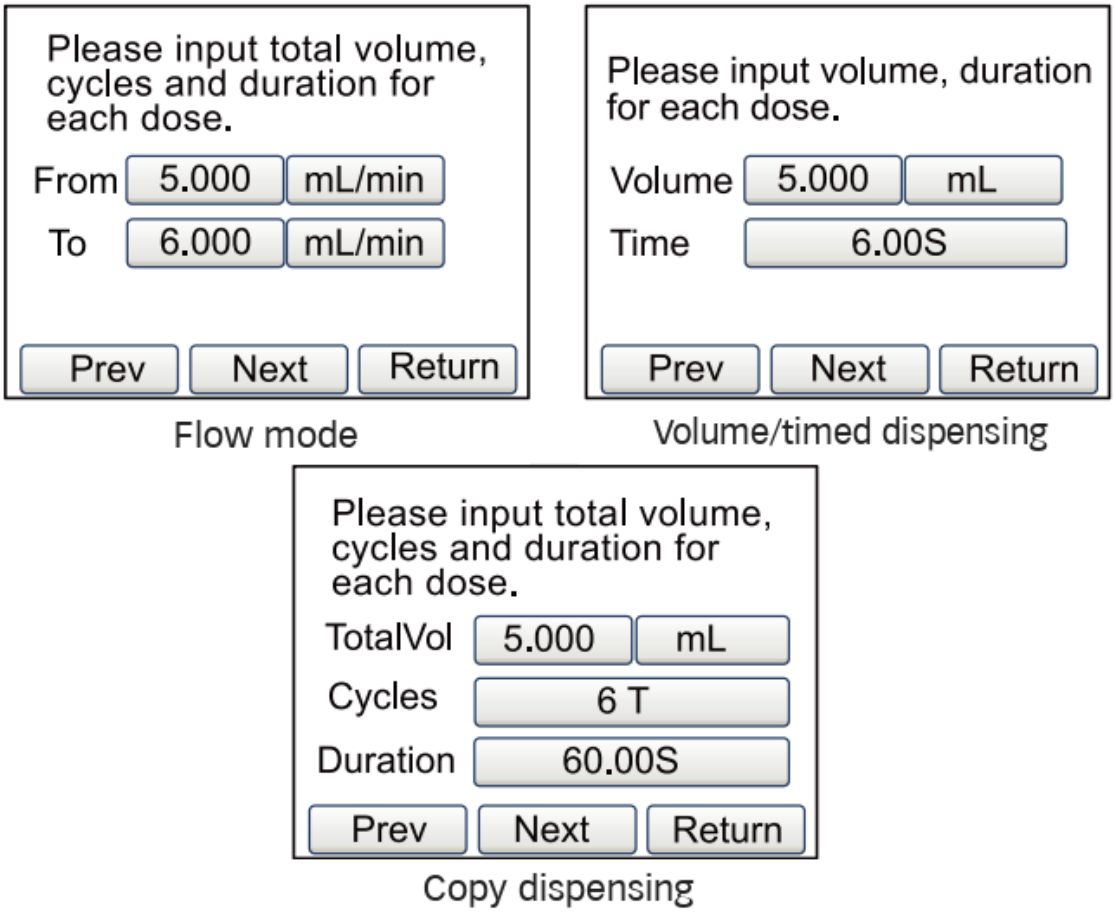

Figure 41 Entering parameters in the operating wizard

4. The system suggests suitable pump heads and tubing. Use Prev to return to input or Next to set further parameters. If no suitable head is found, adjust the input with Prev. A menu recommendation does not replace checking the installed combination.

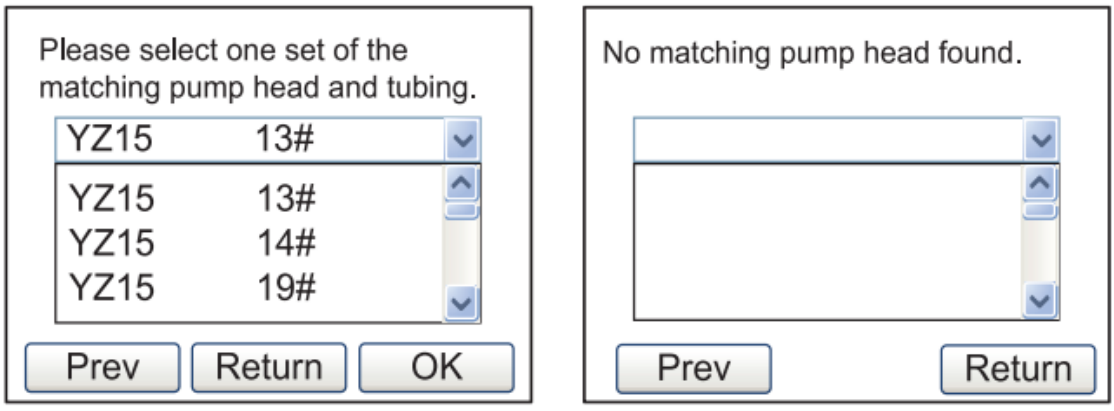

Figure 42 Selecting a suitable combination or correcting the input

Labmaterial GmbH
Rosenweg 3
6072 Sachseln
+41 77 533 28 21
info@labmaterial.ch

5. Set pause time and number of doses. The pause is the standstill time between doses. With a count of 0, dispensing repeats cyclically until START/STOP is pressed. With a count of 1, a single dose is dispensed and the pause has no effect. At higher values, the pump stops automatically after the specified number.

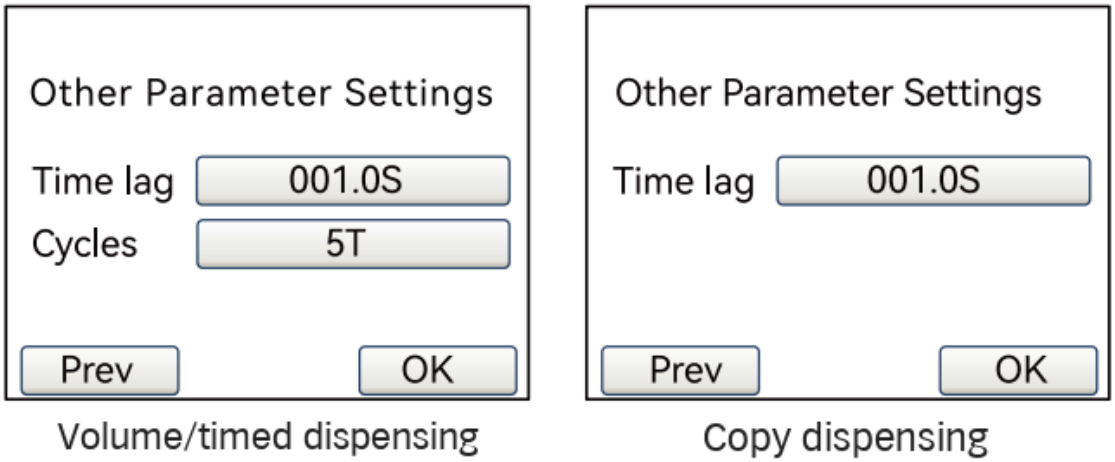

Figure 43 Setting pause time and cycle count

7.4 Operating modes

Select the operating mode with MODE while the pump is stopped.

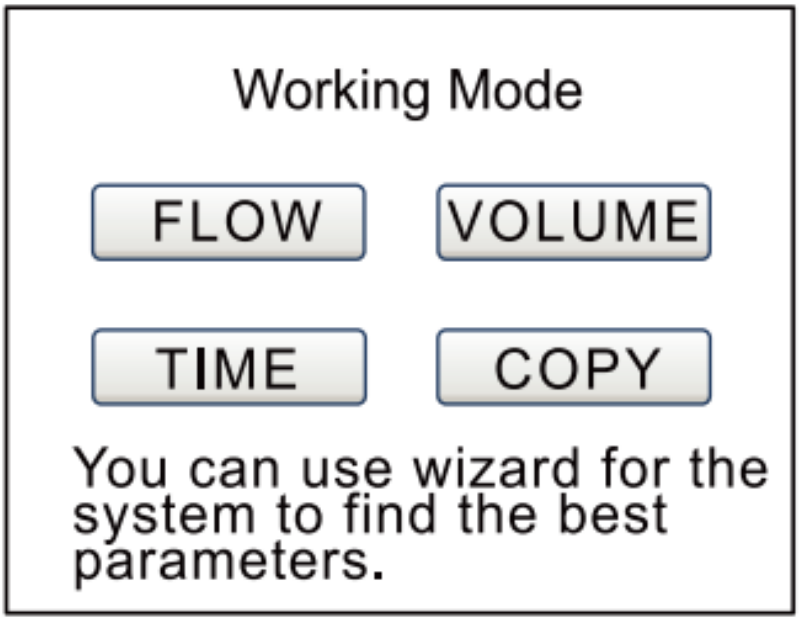

Figure 44 Selecting the operating mode

Labmaterial GmbH
Rosenweg 3
6072 Sachseln
+41 77 533 28 21
info@labmaterial.ch

7.4.1 Flow mode

The pump transfers continuously at the set flow rate. Tap and set the numerical value and unit while the pump is stopped. During operation, use plus and minus for fine adjustment.

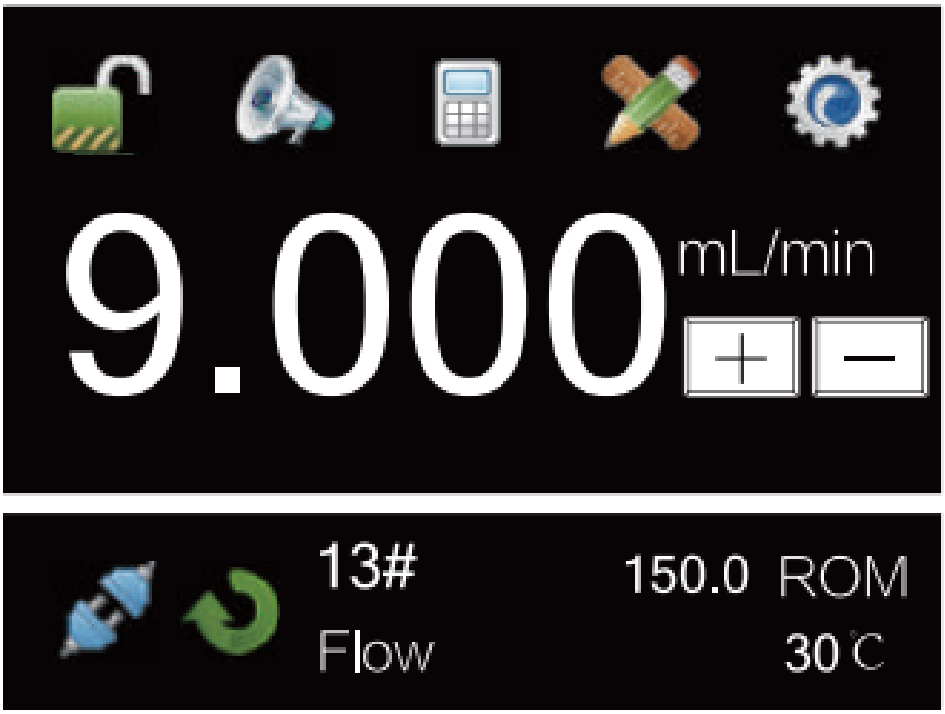

Figure 45 Main screen in flow mode

7.4.2 Volume dispensing

Set liquid volume and flow rate; the pump calculates the required dispensing time.



Figure 46 Volume dispensing main screen

Labmaterial GmbH
Rosenweg 3
6072 Sachseln
+41 77 533 28 21
info@labmaterial.ch

Label	Meaning
A	Volume to deliver per dose in µL, mL or L
B	Flow rate during dispensing in µL/min or mL/min
C	Pause between doses
D	Number of doses; 0 means continuous repetition until START/STOP, 1 means one dose with no effective pause, higher values mean automatic completion after the set number
E	Calculated dispensing time
F	Saved parameter group number

Table 7 Volume dispensing display fields

7.4.3 Timed dispensing

Set running time and flow rate; the pump calculates the volume to be delivered.



Figure 47 Timed dispensing main screen

Label	Meaning
A	Running time of one dose
B	Flow rate during dispensing in µL/min or mL/min
C	Pause between doses
D	Number of doses; 0 means continuous repetition until START/STOP, 1 means one dose with no effective pause, higher values mean automatic completion after the set number
E	Calculated delivery volume
F	Saved parameter group number

Table 8 Timed dispensing display fields

Labmaterial GmbH
Rosenweg 3
6072 Sachseln
+41 77 533 28 21
info@labmaterial.ch

7.4.4 Copy dispensing

Set total volume, flow rate and number of portions. The total volume is divided into this number; the pump calculates the corresponding dispensing time. The pause between portions can be selected in seconds, minutes or hours.



Figure 48 Copy dispensing main screen

Label	Meaning
A	Total volume to set in µL, mL or L
B	Flow rate during dispensing in µL/min or mL/min
C	Pause between portions
D	Number of portions
E	Calculated volume per portion
F	Saved parameter group number

Table 9 Copy dispensing display fields

Five parameter groups can be stored in each dispensing mode. Select the group in quick settings with Prev and Next; see Chapter 4.3.

7.5 External analogue control

The external analogue signal controls speed; external signals control start/stop and direction. The front control keys have no effect in this control method. The standard signal is 0–5V; 0–10V and 4–20mA require the corresponding equipment.

Labmaterial GmbH
Rosenweg 3
6072 Sachseln
+41 77 533 28 21
info@labmaterial.ch

1. Switch off the power. Connect the circuit appropriate for the supply used and plug the DB15 connector into the pump.

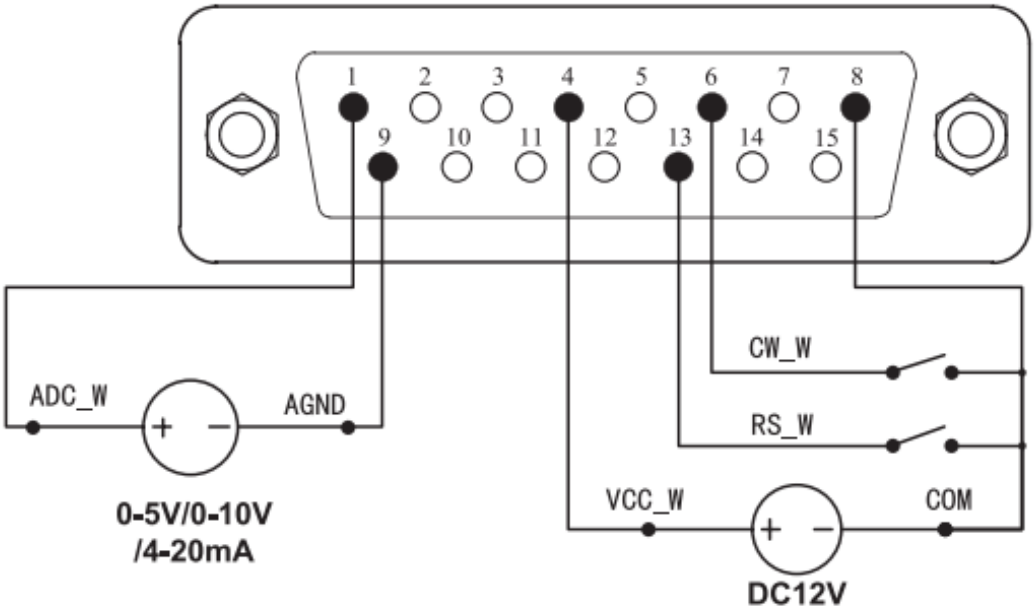

Figure 49 External analogue control with external 12V control supply

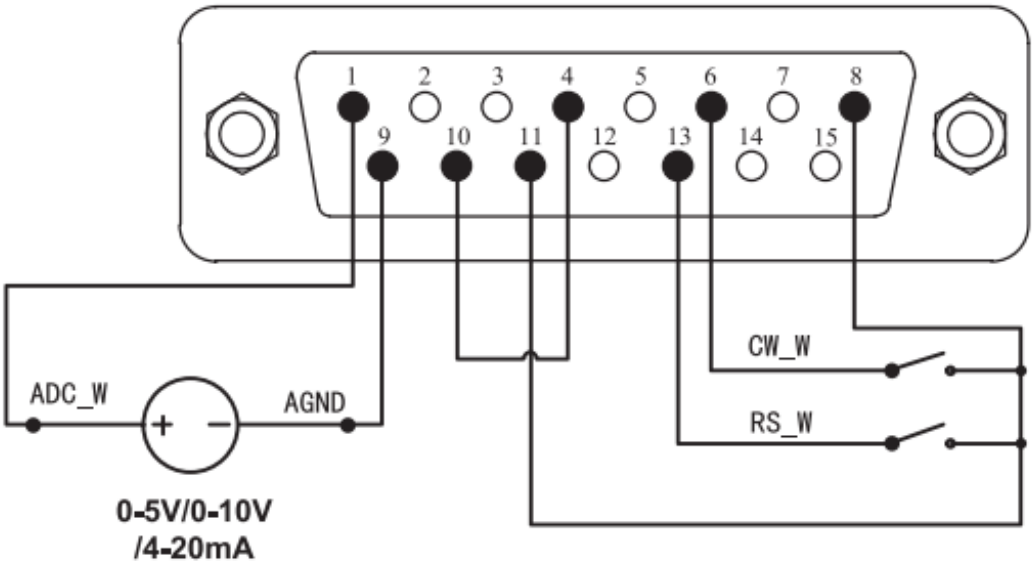

Figure 50 External analogue control with internal control supply

⚠ **Note:** Do not connect mains voltage to the external control connector. Apply only the signals shown in the connection diagrams to the corresponding pins. Do not exceed the permitted signal ranges or apply supply voltage to other pins. Otherwise, permanent damage not covered by the manufacturer's warranty may occur.

⚠ **Note:** Low-voltage signals must be separated from the mains supply. Use a separate shielded ground wire.

⚠ **Note:** Use suitable ferrules on the ends of stranded wires. Otherwise, equipment damage may occur.

Labmaterial GmbH
Rosenweg 3
6072 Sachseln
+41 77 533 28 21
info@labmaterial.ch

2. Switch on and select the control method using the control icon: voltage or current control, according to the equipment fitted.



Figure 51 Current and voltage control

3. In level control, close the RS_W switch and apply the analogue signal. Speed follows the analogue signal; opening the switch stops the pump. An open CW_W switch means clockwise rotation; a closed switch means counterclockwise rotation.
4. In pulse control, close and reopen the RS_W switch once to start. Closing and reopening it again stops the pump. Closing and reopening the CW_W switch changes direction; the next pulse changes direction again.

⚠ **24V control:** The following special 24V circuit shows a 1.5kΩ resistor in series with each of RS_W and CW_W. Without the resistors required for the circuit shown, the internal pump circuitry may be damaged. 24V depends on the equipment version. Before connection, have Labmaterial GmbH confirm the wiring required for the actual device; do not apply 24V without checking.

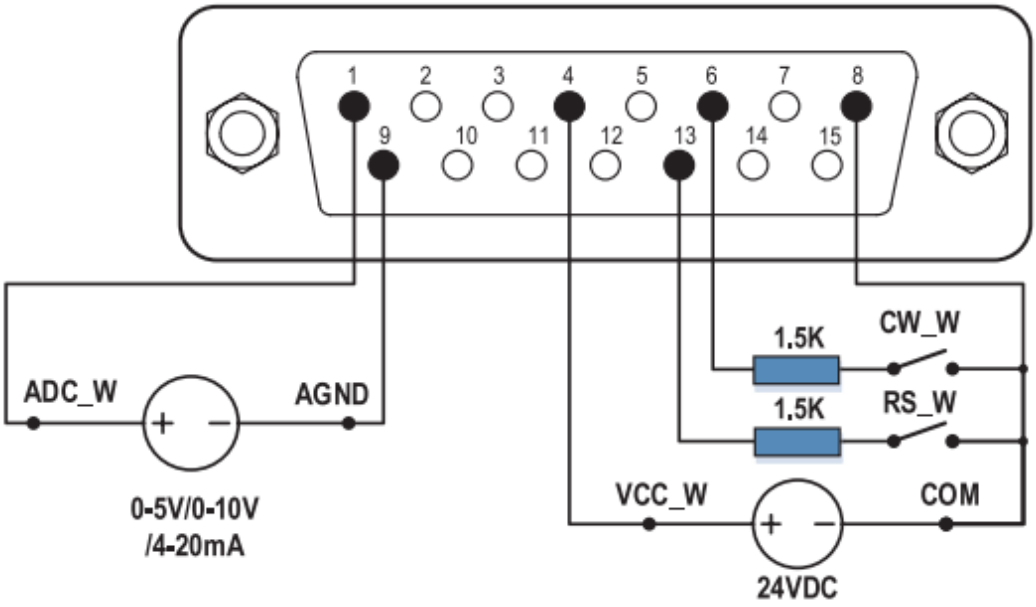

Figure 52 Special 24V wiring – device-specific confirmation required

Labmaterial GmbH
Rosenweg 3
6072 Sachseln
+41 77 533 28 21
info@labmaterial.ch

7.6 Communication via RS485 and Modbus

RS485 supports the MODBUS protocol for controlling various pump functions. Registers, commands and data types are given in the separately stored English Modbus communication protocol; use the F section applicable to BT100F-1.

RS485 is not an Ethernet connection. Ethernet integration requires a suitable external gateway. An RS485 connection does not provide direct Ethernet or Modbus TCP.

1. Switch off the power. Connect the appropriate circuit and plug the DB15 connector into the pump.

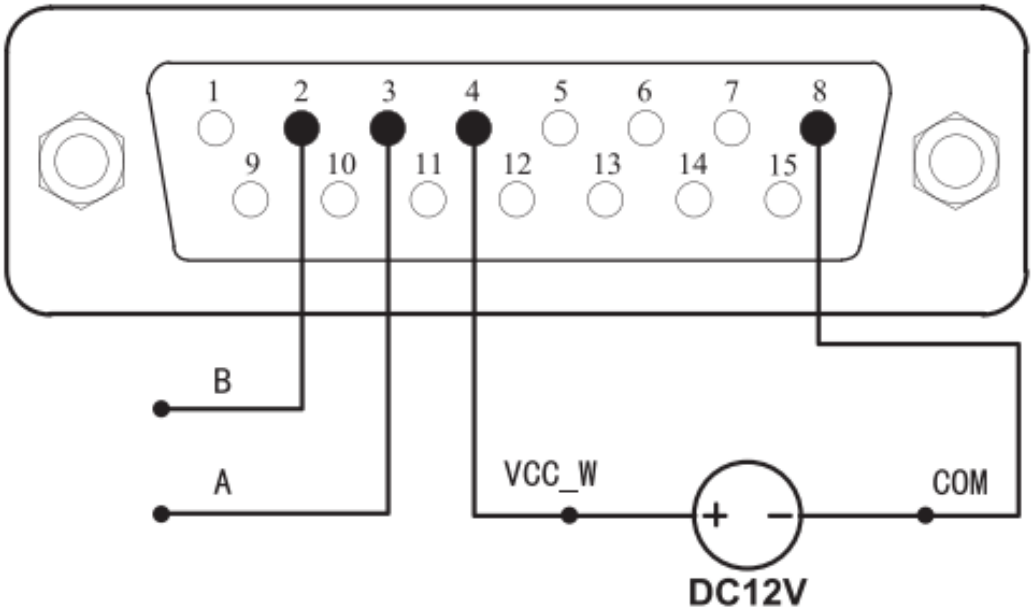

Figure 53 RS485 communication with external 12V control supply

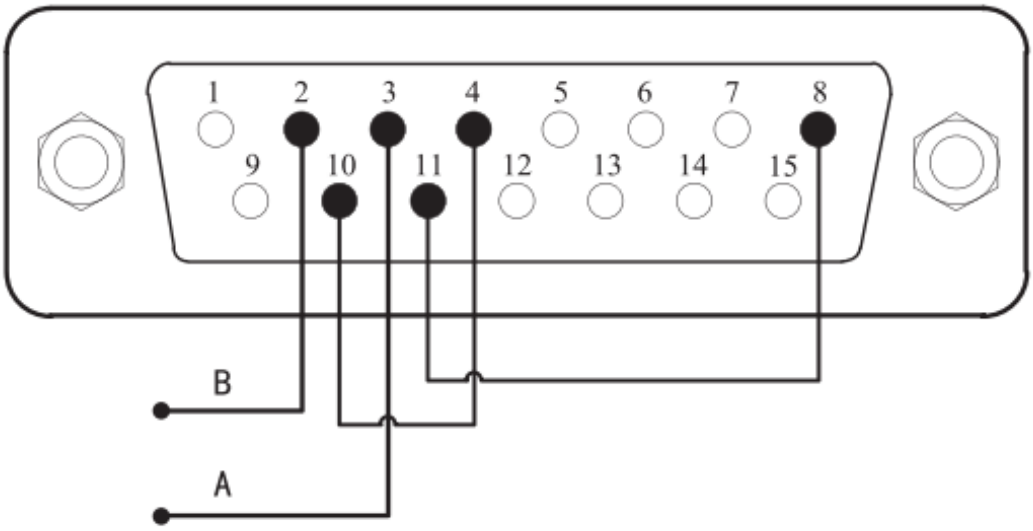

Figure 54 RS485 communication with internal control supply

Labmaterial GmbH
Rosenweg 3
6072 Sachseln
+41 77 533 28 21
info@labmaterial.ch

⚠ **Note:** Do not connect mains voltage to the external control connector. Apply only the signals shown in the connection diagrams to the corresponding pins. Do not exceed the permitted signal ranges or apply supply voltage to other pins. Otherwise, permanent damage not covered by the manufacturer's warranty may occur.

⚠ **Note:** Low-voltage signals must be separated from the mains supply. Use a separate shielded ground wire.

⚠ **Note:** Use suitable ferrules on the ends of stranded wires. Otherwise, equipment damage may occur.

2. Switch on. In internal control mode, the communication icon indicates whether the connection is established.

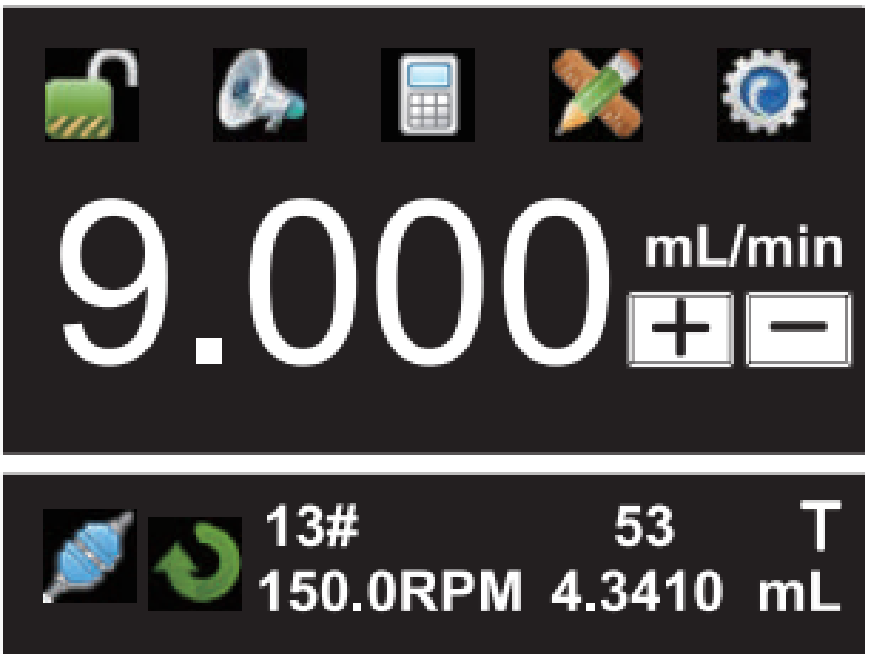

Figure 55 Display with communication connected

3. Once connected successfully, control pump functions using the appropriate communication commands. Use the device-specific register addresses, data types and units.

Labmaterial GmbH
Rosenweg 3
6072 Sachseln
+41 77 533 28 21
info@labmaterial.ch

7.7 Foot pedal control

1. Switch off the power. Connect the appropriate circuit and plug the DB15 connector into the pump.

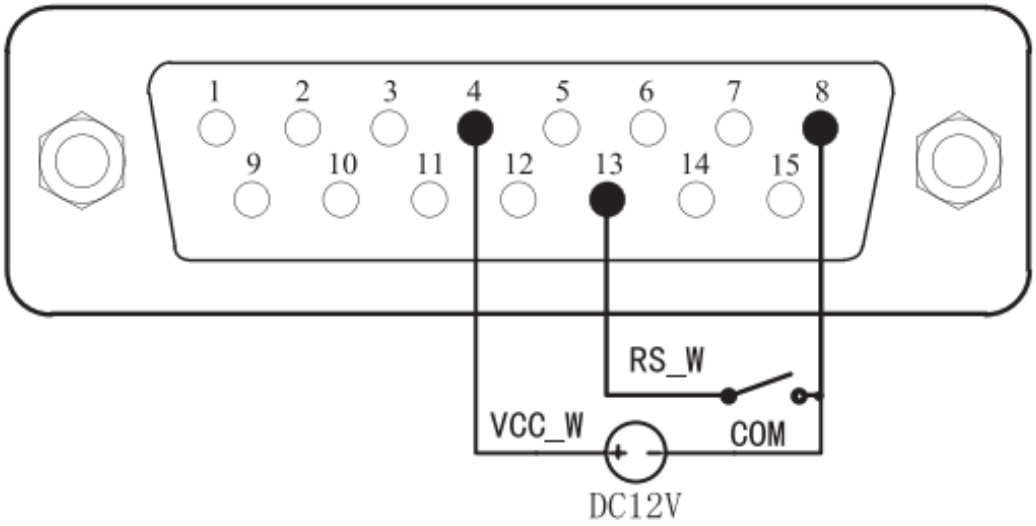

Figure 56 Foot pedal with external 12V control supply

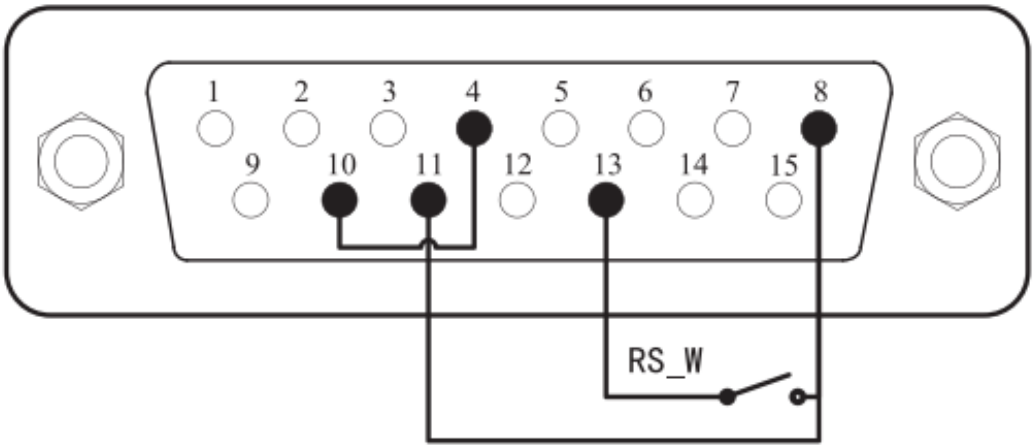

Figure 57 Foot pedal with internal control supply

⚠ **Note:** Do not connect mains voltage to the external control connector. Apply only the signals shown in the connection diagrams to the corresponding pins. Do not exceed the permitted signal ranges or apply supply voltage to other pins. Otherwise, permanent damage not covered by the manufacturer's warranty may occur.

⚠ **Note:** Low-voltage signals must be separated from the mains supply. Use a separate shielded ground wire.

⚠ **Note:** Use suitable ferrules on the ends of stranded wires. Otherwise, equipment damage may occur.

2. Switch on and open the main screen. In flow mode, closing and reopening the pedal switch triggers pumping.
3. In foot pedal mode with level control, the pump runs while the switch is closed and stops when it opens.

Labmaterial GmbH
Rosenweg 3
6072 Sachseln
+41 77 533 28 21
info@labmaterial.ch

4. In foot pedal mode with pulse control, closing and reopening once starts the pump; closing and reopening again stops it.



Figure 58 Foot pedal control display

Labmaterial GmbH
Rosenweg 3
6072 Sachseln
+41 77 533 28 21
info@labmaterial.ch

8 Troubleshooting and maintenance

8.1 Manufacturer's warranty and customer service

A three-year Leadfluid manufacturer's warranty applies to the BT-F series. Contact Labmaterial regarding claims and the conditions applicable at purchase.

1. The warranty applies only to the complete BT-F peristaltic pump drive. The pump head, tubing and other consumables are excluded.
2. The warranty period starts on the purchase date shown on the customer's valid proof of purchase.
3. Within the warranty period, Leadfluid provides free repair or replacement of covered parts.
4. Damage caused by human intervention, for example water, dropping or improper use, is not covered. For such cases, Leadfluid specifies repairs without labour charges, with material costs charged.

⚠ **Special notes:** Check model and specifications before using tubing and other consumables. After unpacking and use, the manufacturer excludes returns and exchanges except for quality defects.

8.2 Drive spare parts

Spare part	Specification
Fuse	1A
Power cable	250V, 10A

Table 10 Drive spare parts

8.3 Daily maintenance

- Follow the maintenance table below for regular servicing.
- The fan is at the rear of the pump. Do not cover it, to avoid impairing heat dissipation.
- Do not rinse the peristaltic pump with water. If tubing bursts during operation, immediately remove liquid from the head and dry the affected areas.
- Do not use chemical solvents to clean the surfaces of the pump or head.

⚠ **Note:** Always disconnect the pump from the mains before opening the head cover to change tubing, or before installation, removal or maintenance.

Labmaterial GmbH
Rosenweg 3
6072 Sachseln
+41 77 533 28 21
info@labmaterial.ch

8.4 Maintenance schedule

Regular scheduled maintenance helps reduce damage to pump components and protect people and property.

Task	Frequency	Action if abnormal
Check pump for leaks and damage	Before every start; daily visual inspection; regularly during operation	Repair leaks and damage before operation; replace parts if necessary; remove spilled liquid completely.
Check for unusual temperature or noise	Daily visual inspection and regularly during operation	Check and replace worn parts.
Check whether tubing replacement is required	Check tubing condition at least every three days	Replace tubing if flow falls below 75% of the original value, the tubing has burst or is badly worn, or the specified replacement interval is reached.
Check pump head and rotor assembly	Check rollers weekly for free movement; check when changing tubing; perform a complete annual wear inspection including bearing play and operation	Worn or damaged surfaces can damage tubing prematurely. Replace worn parts in good time.

Table 11 Maintenance tasks

Labmaterial GmbH
Rosenweg 3
6072 Sachseln
+41 77 533 28 21
info@labmaterial.ch

8.5 Troubleshooting

No.	Type	Fault	Remedy
1	Hardware	No display	Check power cable and connection. Check whether the fuse is faulty; contact Labmaterial GmbH for replacement if it is.
2	Hardware	Motor does not rotate	Check whether a very low flow or speed is set, for example 0.1rpm.
3	Hardware	Motor vibrates	Check that pump head screws and locking lever are secure.
4	Hardware	Motor rotates in one direction only	Check the direction key and external direction signal.
5	Hardware	Key does not respond	Check whether the device is locked.
6	Hardware	Loud operating noise	The manufacturer identifies resonance ranges around 70rpm and 120rpm with increased noise. Check that pump head screws and locking lever are secure.
7	Hardware / Software	Communication does not work	First check software: Is communication mode selected? Reset device address. Rule out duplicate bus addresses. Then check hardware: wiring and external control supply.
8	Hardware / Software	External control does not work	First check operating mode. Then check external control wiring and supply.
9	Hardware / Software	Inaccurate flow display	Calibrate the flow.

Table 12 Faults and remedies

⚠ **Note:** There are no user-repairable parts inside the pump. According to the manufacturer, unauthorised repairs void the pump warranty. If a fault persists after checking software and external connections, contact Labmaterial GmbH and do not repair the device yourself.

⚠ **Note:** This product is not medically certified. If used as part of a medical device, the medical device itself must hold the appropriate certification.

Labmaterial GmbH
Rosenweg 3
6072 Sachseln
+41 77 533 28 21
info@labmaterial.ch

9 Dimensions

BT100F-1 drive dimensions: 288 × 150 × 237mm (L × W × H).

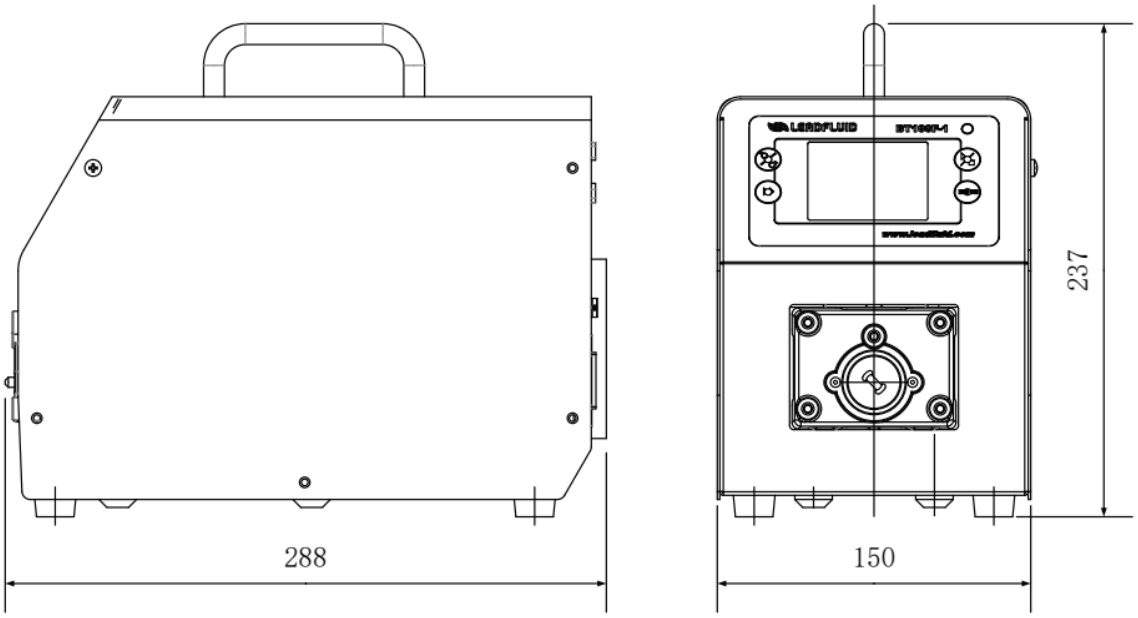

Figure 59 BT100F-1 drive dimensions in millimetres

Labmaterial GmbH
Rosenweg 3
6072 Sachseln
+41 77 533 28 21
info@labmaterial.ch

10 Ordering information

Product code	Product name	Drive and pump head
1701_4	Peristaltic pump – small to medium flow volumes – 8 channels	BT100F-1 + DG10-8

Table 13 Ordering information

10.1 Optional accessories

Product code	Accessory	Use
P1701_1	Footswitch for peristaltic and gerotor pumps	BT100F-1; function according to the selected control method

Table 14 Optional accessories

Labmaterial GmbH
Rosenweg 3
6072 Sachseln
+41 77 533 28 21
info@labmaterial.ch

11 Model designation

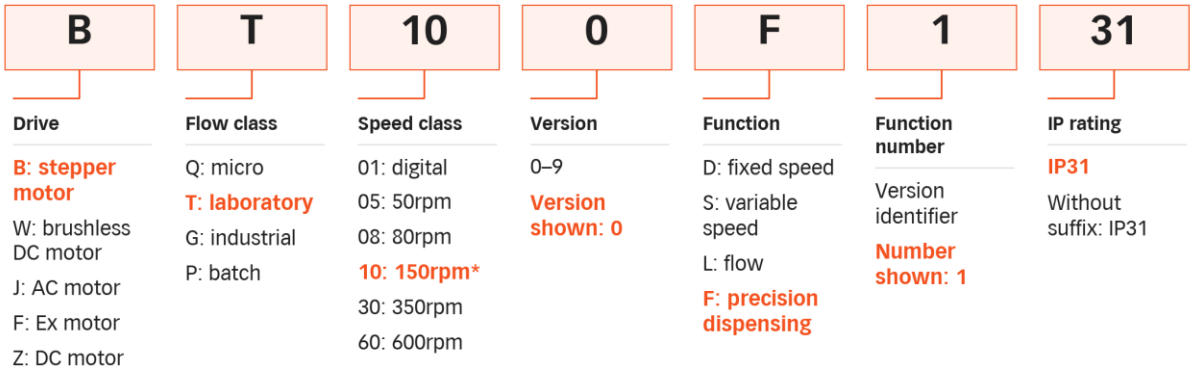

* BT102S: 100rpm

Figure 60 BT-F family designation system

Labmaterial GmbH
Rosenweg 3
6072 Sachseln
+41 77 533 28 21
info@labmaterial.ch

12 Technical data

Property	Specification
Operating modes	Flow mode, volume dispensing, timed dispensing and copy dispensing
Memory	Five parameter groups in dispensing modes
Operating functions	Start/stop, direction, full speed, anti-drip and adjustable restart function
Communication	RS485, MODBUS; DB15 control connector and RS232 connection according to pin assignment
Analogue setpoint	0–5V standard; 0–10V and 4–20mA optional
Digital control	5V/12V standard; 24V optional and only with confirmed device-specific wiring
Drive flow range	0.00011–1'650mL/min, depending on pump head and tubing
Our configuration	DG10-8, 8 channels
DG10 head: full reference range	0.00011–32mL/min per channel, depending on tubing
Reference point for tubing ID 2.4mm	21mL/min per channel at 100rpm
Speed range	0.1–150rpm; with DG10-8 maximum 100rpm
Speed resolution	0.1rpm
Speed error	Less than ±0.2%
Adjustable dispensing volume	0.001µL–9'999L; recommended minimum fill volume 50µL
Number of doses	1–999; 0 means unlimited repetition
Pause time	0.1–999.9s, min or h; selectable time unit
Operation	Membrane keys and colour LCD touchscreen
Mains supply	230V, 50/60Hz
Power consumption	<60W
Ambient temperature	0–40°C
Relative humidity	<80%
Drive dimensions (L × W × H)	288 × 150 × 237mm
Drive weight	5.2kg
Protection rating	IP31
Pollution degree	2

Table 15 BT100F-1 functions and performance data

Labmaterial GmbH
Rosenweg 3
6072 Sachseln
+41 77 533 28 21
info@labmaterial.ch

Actual delivery depends on pump head, tubing, liquid and setup. Adjustable dose values do not guarantee that every volume can be dispensed with equal accuracy using every tubing size. Individual channel flow rates are not added into a per-channel value.

Property	BT100F · BT300F · BT600F
Operating modes	Flow, volume, time and copy
Communication	RS485, MODBUS
Operating functions	Start/stop, direction, full speed, state memory, external control and foot pedal
Compatible heads	BT100F: DG6/DG10, DT10, YZ15/YZ25, YT15/YT25 and DT15. BT300F and BT600F: YZ15/YZ25, YT15/YT25 and DT15. Combinations according to the flow table.
Analogue setpoint	0–5V; other ranges depend on equipment
Flow range	BT100F: 0.00011–750mL/min; BT300F: 0.005–1'750mL/min; BT600F: 0.005–3'000mL/min
Speed range	BT100F: 0.1–150rpm; BT300F: 0.1–350rpm; BT600F: 0.1–600rpm
Speed resolution and error	0.1rpm; less than ±0.2%
Operation	Membrane keys and colour LCD touchscreen
Mains supply	230V, 50/60Hz
Power consumption	BT100F: <40W; BT300F: <50W; BT600F: <60W
Environment	0–40°C; relative humidity <80%
Drive dimensions (L × W × H)	BT100F: 235 × 150 × 237mm; BT300F and BT600F: 226 × 150 × 243mm
Drive weight	BT100F: 4.8kg; BT300F: 5.3kg; BT600F: 5.5kg
Protection rating	IP31
Pollution degree	2

Table 16 Other BT-F versions as technical references

Labmaterial GmbH
Rosenweg 3
6072 Sachseln
+41 77 533 28 21
info@labmaterial.ch

13 Pump flow table

Drive	Pump head	Channels	Compatible tubing	Flow per channel mL/min
BT100F-1	DG/DS, 10 rollers	8, 12, 16, 24	Wall 0.8–1mm; ID ≤3.17mm	0.00011–32
BT100F-1	DG/DS, 6 rollers	8, 12, 16, 24	Wall 0.8–1mm; ID ≤3.17mm	0.00016–49
BT100F-1	DT10-88	8	#13, #14; wall 0.8–1mm; ID ≤3.17mm	0.00023–64
BT100F-1	YZ15 / YZ15T	1, 2, 4	#13, #14, #19, #16, #25, #17, #18	0.005–641
BT100F-1	YT25	1, 2, 4	#114, #116, #15, #24, #35, #36	0.024–750
BT100F-1	DT15-44	4	#19, #16, #25, #17	0.067–560
BT100F-1	KZ25	1, 2	#15, #24, #35, #36	0.31–1'650
BT100F-1	KZ25-L	1	#15, #24, #35, #36	0.31–1'650
BT100F-1	YZ25	1, 2, 4	#15, #24	0.17–450
BT100F-1	YT15	1, 2, 4	#13, #14, #16, #19, #25, #17, #18	0.006–675
BT100F-1	DT15-14	1	#16, #19, #25, #17	0.067–560
BT100F-1	DT15-24	2	#16, #19, #25, #17	0.067–560

Table 17 BT100F-1 – pump heads, channels, tubing and flow per channel

A maximum speed of 100rpm applies to DG heads. The following table contains technical references for other BT-F drives. It does not expand the ordering list.

Drive	Pump head	Channels	Compatible tubing	Flow per channel mL/min
BT100F	DG6-1	1	Wall 0.8–1mm; ID ≤3.17mm	0.00016–36
BT100F	DG10-1	1	Wall 0.8–1mm; ID ≤3.17mm	0.00011–23
BT100F	DG6-2	2	Wall 0.8–1mm; ID ≤3.17mm	0.00016–36
BT100F	DG10-2	2	Wall 0.8–1mm; ID ≤3.17mm	0.00011–23
BT100F	DG6-4	4	Wall 0.8–1mm; ID ≤3.17mm	0.00016–36
BT100F	DG10-4	4	Wall 0.8–1mm; ID ≤3.17mm	0.00011–23
BT100F	DT10-18	1	#13, #14; wall 0.8–1mm; ID ≤3.17mm	0.00023–64
BT100F	DT10-28	2	#13, #14; wall 0.8–1mm; ID ≤3.17mm	0.00023–64
BT100F	DT10-48	4	#13, #14; wall 0.8–1mm; ID ≤3.17mm	0.00023–64
BT100F	YZ15	1, 2	#13, #14, #16, #19, #25, #17	0.005–450
BT100F	YZ25	1, 2	#15, #24	0.17–450
BT100F	YT15	1, 2	#13, #14, #16, #19, #25, #17, #18	0.006–675
BT100F	YT25	1, 2	#15, #24, #35, #36	0.18–750
BT100F	DT15-14	1	#16, #19, #25, #17	0.067–560
BT100F	DT15-24	2	#16, #19, #25, #17	0.067–560
BT100F	DT15-44	4	#16, #19, #25	0.067–330
BT300F	YZ15	1, 2	#13, #14, #16, #19, #25, #17	0.005–1'050

Labmaterial GmbH
Rosenweg 3
6072 Sachseln
+41 77 533 28 21
info@labmaterial.ch

Drive	Pump head	Channels	Compatible tubing	Flow per channel mL/min
BT300F	YZ25	1, 2	#15, #24	0.17–1'050
BT300F	YT15	1, 2	#13, #14, #16, #19, #25, #17, #18	0.006–1'575
BT300F	YT25	1, 2	#15, #24, #35, #36	0.18–1'750
BT300F	DT15-14	1	#16, #19, #25, #17	0.067–1'307
BT300F	DT15-24	2	#16, #19, #25, #17	0.067–1'307
BT300F	DT15-44	4	#16, #19, #25	0.067–770
BT600F	YZ15	1, 2	#13, #14, #16, #19, #25, #17	0.005–1'800
BT600F	YZ25	1, 2	#15, #24	0.17–1'800
BT600F	YT15	1, 2	#13, #14, #16, #19, #25, #17, #18	0.006–2'700
BT600F	YT25	1	#15, #24, #35, #36	0.18–3'000
BT600F	DT15-14	1	#16, #19, #25, #17	0.067–2'240
BT600F	DT15-24	2	#16, #19, #25, #17	0.067–2'240
BT600F	DT15-44	4	#16, #19, #25	0.067–1'320

Table 18 Other BT-F drives – flow table as a technical reference

⚠ **Note:** The listed pump heads, channel counts and flow values per channel were determined with purified water and tubing at normal laboratory temperature and pressure. The values are for reference. Pressure, temperature, pumped medium properties, tubing material and other operating conditions affect actual flow performance. Contact Labmaterial GmbH for the specific application.

Labmaterial GmbH
Rosenweg 3
6072 Sachseln
+41 77 533 28 21
info@labmaterial.ch

14 Suitable pump heads



Figure 61 BT-F family pump heads

The supplied BT100F-1 configuration uses a DG10-8 head with eight channels. Other head illustrations and technical reference tables do not specify the scope of delivery. Follow the corresponding head installation instructions.

Labmaterial GmbH
Rosenweg 3
6072 Sachseln
+41 77 533 28 21
info@labmaterial.ch

15 Electrical data for control inputs and outputs

15.1 Digital inputs

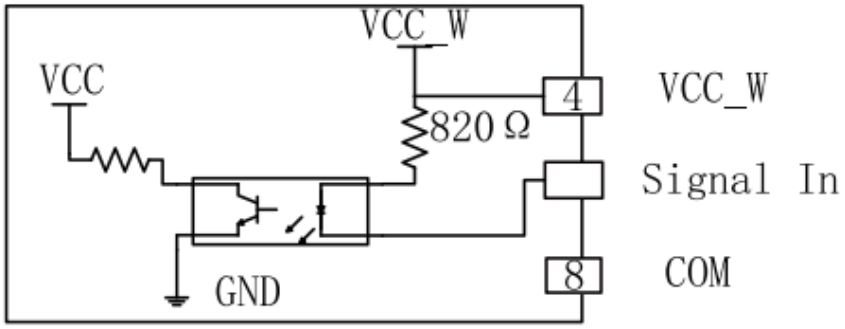

Figure 62 Optically isolated input circuit principle

Property	Parameter
Current when input active	5.5mA < I_on < 15mA
Current when input inactive	I_off < 1.5mA
Signal type	Open/closed contact or open-collector NPN transistor
External control voltage	5V/12V standard; 24V optional
Wiring at 24V	Have Labmaterial GmbH confirm the device-specific wiring before connection; see Chapter 7.5.
Isolation	Optoelectronic

Table 19 Electrical data of digital inputs

15.2 Digital outputs

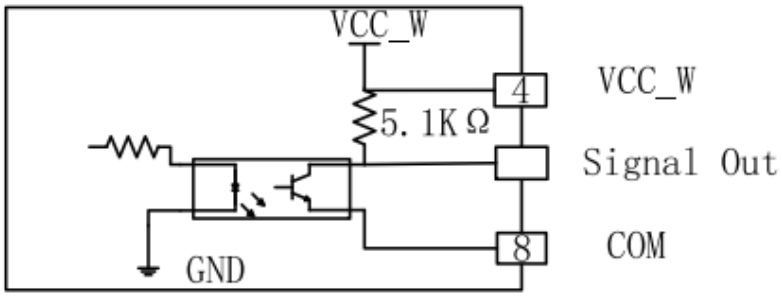

Figure 63 Optically isolated output circuit principle

Property	Parameter
Output type	Open-collector NPN transistor with internal pull-up
Isolation	Optoelectronic

Table 20 Electrical data of digital outputs

Labmaterial GmbH
Rosenweg 3
6072 Sachseln
+41 77 533 28 21
info@labmaterial.ch

15.3 Analogue inputs

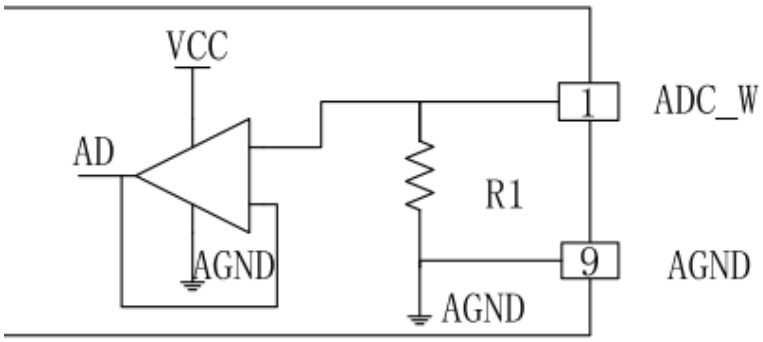

Figure 64 Analogue input circuit principle

Signal range	Input impedance below 100Hz	Permitted error	Resolution
0–5V	R1 = 4kΩ	±1%	5mV
0–10V, optional	R1 = 4kΩ	±1%	10mV
4–20mA, optional	R1 = 248Ω	±1%	16µA

Table 21 Electrical data of analogue inputs

15.4 Internal auxiliary supply

Property	Parameter
Output voltage	12V DC ±1V
Permitted output current	<130mA

Table 22 Internal auxiliary supply

15.5 External control circuit supply

Property	Parameter
Permitted input voltage of the corresponding control circuit version	5–25V DC
Required available current	>350mA

Table 23 External control circuit supply

The external control supply does not replace the pump's mains supply. The operating voltage of the control circuit does not generally permit arbitrary digital signal voltages. For 24V, have device-specific wiring confirmed before connection.

Labmaterial GmbH
Rosenweg 3
6072 Sachseln
+41 77 533 28 21
info@labmaterial.ch

16 Touchscreen calibration

If touches are detected inaccurately or the display does not respond, the touchscreen can be calibrated. This function calibrates touch detection and is separate from flow calibration in Chapter 7.2.

1. Switch off the pump. Hold START/STOP and MODE simultaneously and switch on the device. Release the keys when the calibration screen appears.
2. Touch the bottom-left point with a finger or a blunt stylus tip. After OK appears, touch the top-right point; OK appears again.

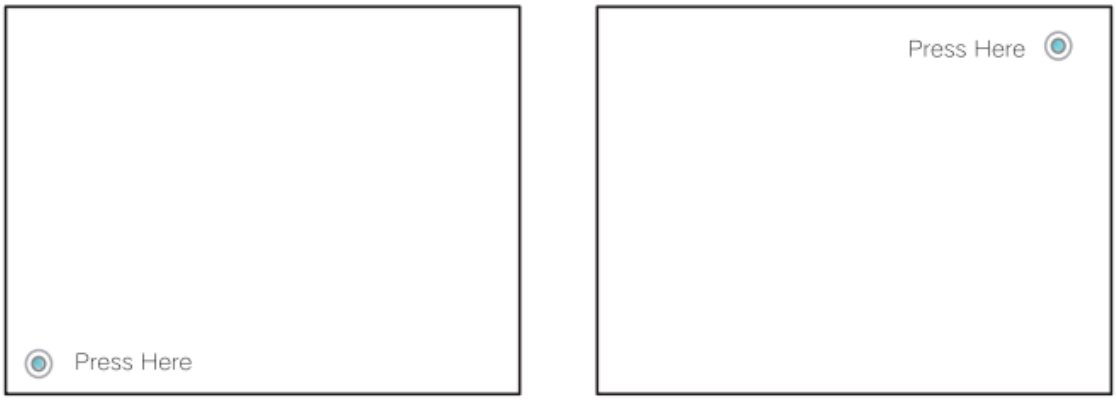

Figure 65 Touch points for touchscreen calibration

3. The display shows the measured coordinates. Touch anywhere on the screen to finish calibration.

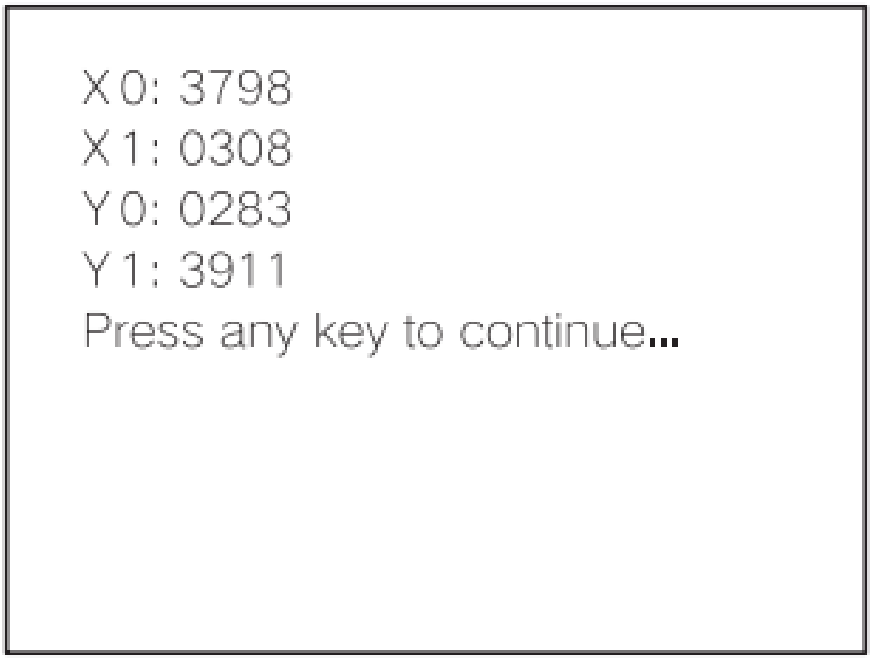

Figure 66 Coordinates after touchscreen calibration

Disclaimer

The suitability of the pump, pump head and tubing for the intended application must be checked before use. To the extent permitted by law, Labmaterial GmbH accepts no liability for damage caused by improper use, failure to follow these instructions, unauthorised modifications or the use of unsuitable media and tubing. Liability for intent and gross negligence and mandatory statutory product liability remain unaffected.