labmaterial.ch
Laborgeräte zu fairen Preisen.

Labmaterial GmbH
Rosenweg 3
6072 Sachseln
+41 77 533 28 21
info@labmaterial.ch

YT15 pump head – Technical data and operating notes

Quick-change pump head with an adjustable occlusion gap and self-adjusting tubing clamps. The drive, tubing size and operating conditions determine the usable flow performance.

Features

- Quick tubing changes using the locking lever
- Manually adjustable occlusion gap
- Four rollers made of 304 stainless steel
- Stacking for up to four channels



Functions and use

The adjustable occlusion gap allows adjustment to the tubing used. A smaller gap can increase the achievable delivery pressure but places greater stress on the tubing. A larger gap can reduce tubing wear. The setting must ensure reliable delivery without backflow when stopped.

The self-adjusting tubing clamps secure different compatible tubing sizes without manual clamp adjustment. The locking lever makes frequent tubing changes easier. Four rollers and a special tubing guide promote even delivery and are designed to reduce wear and excessive tubing stress.

Technical data

Property	Specification
Product code	1701_B4
Tubing sizes	#13, #14, #19, #16, #25, #17, #18
Tubing wall thickness	1.6mm
Tubing inner diameter	0.8 / 1.6 / 2.4 / 3.1 / 4.8 / 6.4 / 7.9mm
Maximum head speed	600rpm; also observe the drive limit
Reference flow range	0.006–2'700mL/min; depending on the drive and tubing
Rollers / housing	4 × 304 stainless steel / PPS, black
Occlusion gap / tubing clamps	Adjustable / self-adjusting
Channels	1 per head; stacking for up to 4 channels
Dimensions H × W × D	138.5 × 103 × 63mm
Head weight	0.62kg
Environment	0–40°C; relative humidity <80%

Labmaterial GmbH
Rosenweg 3
6072 Sachseln
+41 77 533 28 21
info@labmaterial.ch

Safety instructions

⚠ **Important information: Read the operating instructions carefully before operation.**

Symbol	Meaning
	Warning: Keep fingers away from moving parts.
	Warning: Caution.
	Warning: Caution, hot surface.
	Warning: Caution, electric shock hazard.
	Note: Recycle this product.
	Warning: Wear personal protective equipment.

Table 1 Safety symbols

Danger

⚠ Operate the pump drive only with the power supply stated on its nameplate. Otherwise, the device may be damaged.

⚠ Do not open the drive housing or modify the inside of the device yourself. This may cause malfunctions or electric shock.

Switch off the power before inserting or removing the pump tubing. Keep away from the rotating rollers so that fingers and clothing cannot become caught in the mechanism.

For hazardous liquids, establish a procedure appropriate to the liquid concerned and protect people from injury during use.

Safety during operation

Before use, check that the liquid does not react chemically with the tubing or pump head. Otherwise, the tubing or head may be damaged. If in doubt, contact Labmaterial GmbH.

Tubing is a wear part and must be checked regularly. To the extent permitted by law, Leadfluid and Labmaterial GmbH accept no responsibility for losses resulting from tubing damage, particularly leaks of toxic, harmful or valuable liquids.

⚠ Use only tubing suitable for the pump head. Observe the compatibility and flow data in the section “Tubing and flow performance”.

⚠ During long idle periods, raise the pressure block to prevent the inner tubing walls from sticking together under prolonged compression.

⚠ If actual environmental conditions, such as temperature, humidity or supply voltage, exceed the technical specifications and the device is damaged as a result, this is not covered by the standard manufacturer’s warranty. Repair costs will be charged; further consequential damage is not covered by this manufacturer’s warranty.

⚠ Protection against injury from moving pump parts is primarily provided by the pump head’s safety device. Its design may differ between head models. Follow the instructions for the head actually installed.

⚠ If the pump was running before a power failure, it may restart automatically when power returns. Check the restart setting of the drive being used and prevent unintended restarting.

Labmaterial GmbH
Rosenweg 3
6072 Sachseln
+41 77 533 28 21
info@labmaterial.ch

Structure and components

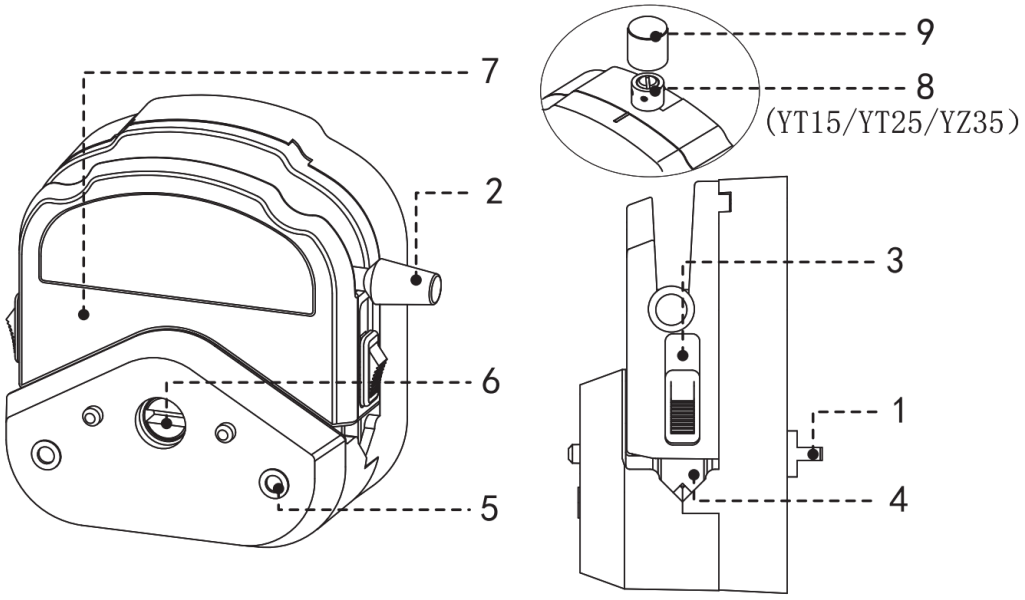

Figure 1 Head family structure with YT15 fine adjustment and numbered components

1. **Flat shaft end**: Connects to the drive coupling and allows pump heads to be stacked.
2. **Lever**: Operated when inserting the tubing.
3. **Slider**: When pressed down, it compresses the tubing together with the roller assembly.
4. **Tubing clamp**: Prevents the tubing from moving after the slider is pressed down.
5. **Mounting hole**: Receives the screw securing the pump head to the drive.
6. **Coupling**: Connection for stacking pump heads.
7. **Upper pressure block**: Raised or lowered with the lever to release or compress the tubing.
8. **YT15 fine adjustment knob**: Fine adjustment of the occlusion gap.
9. **Dust cap**: Covers the fine adjustment knob on YT heads equipped with one. Open the cap for fine adjustment.

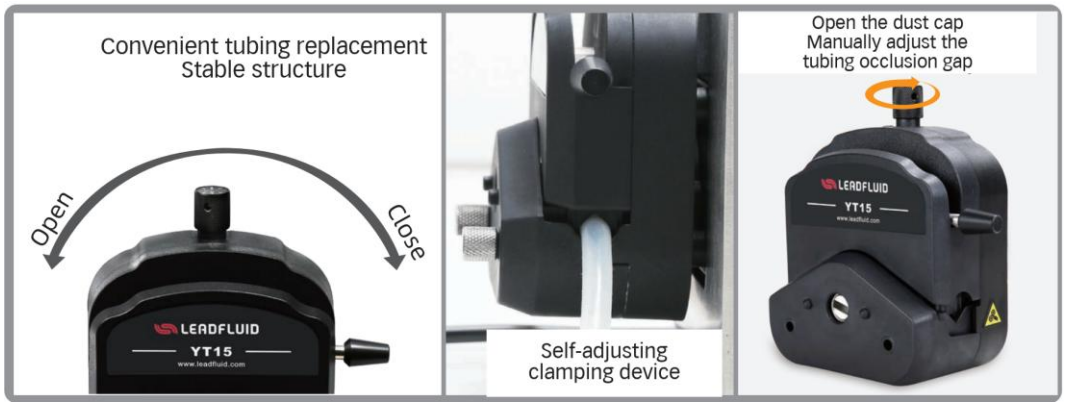

Figure 2 Locking lever, tubing clamp and fine adjustment on the YT15

Open means opening, Close means closing. The fine adjustment knob is under the dust cap. The mounting, tubing insertion and adjustment steps are described in the operating notes in this document.

Labmaterial GmbH
Rosenweg 3
6072 Sachseln
+41 77 533 28 21
info@labmaterial.ch

Mounting on the drive

The installation drawing shows the shared mounting principle of the YZ15/YZ25/YT15/YT25 family. The drive and mounting arrangement must be compatible with YT15.

1. Align the flat shaft end of the pump head with the drive and slide it into the slot in the front drive coupling.
2. Align the pump head with the two locating pins on the bracket and seat it fully against the drive.
3. Insert the two pump head screws through the mounting holes and tighten them.

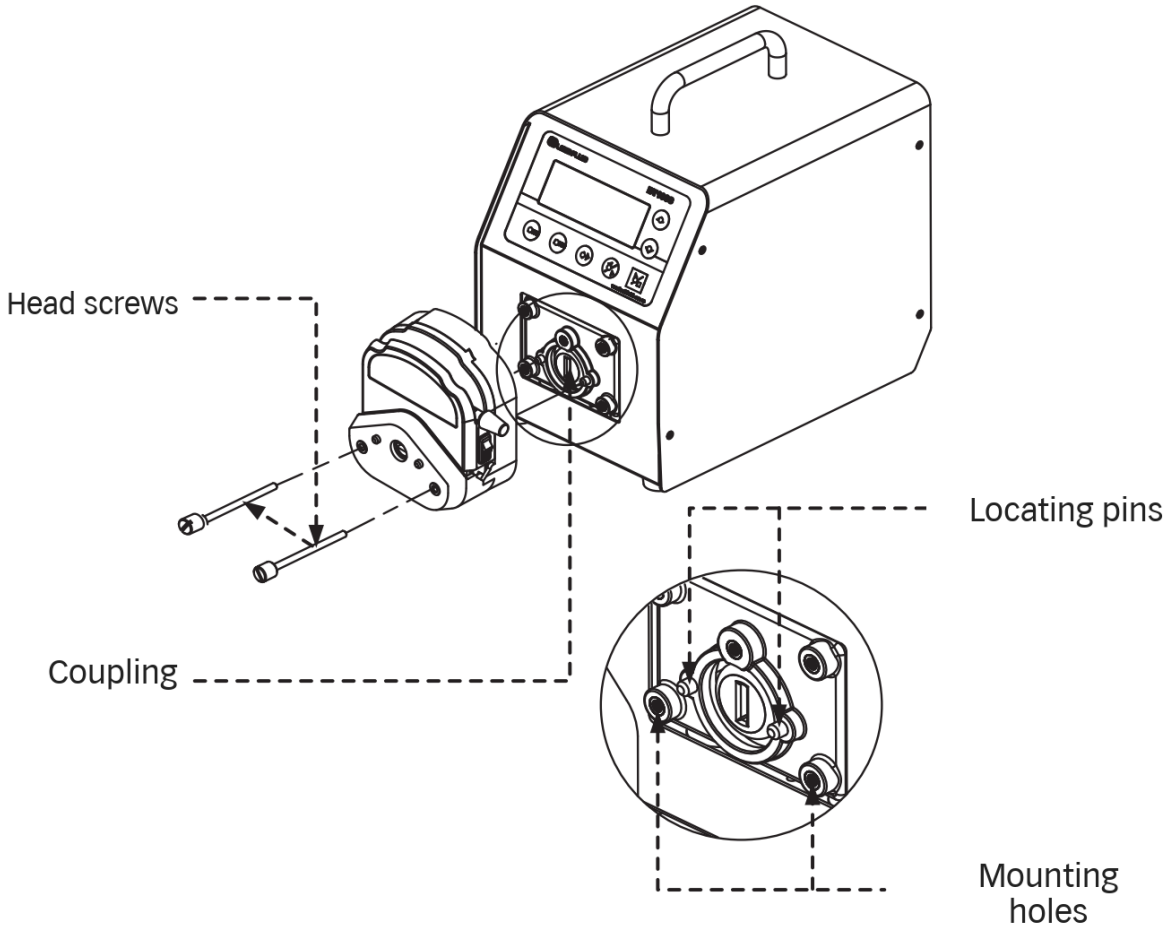

Figure 3 Mounting YT15 on a compatible drive; shared head family drawing

Selecting tubing

Tubing from different manufacturers is available for YT/YZ heads. Wall thickness and inner diameter tolerances affect flow accuracy. Only use the tubing dimensions specified for the particular head.

The nominal wall thickness suitable for YT15 is 1.6mm. All compatible tubing sizes and flow data are listed in the section “Tubing and flow performance”.

Labmaterial GmbH
Rosenweg 3
6072 Sachseln
+41 77 533 28 21
info@labmaterial.ch

Inserting and removing tubing

Switch off the power before inserting or removing tubing. Keep fingers and clothing away from the rollers.

Inserting tubing

1. Move the lever to the left into the horizontal position and raise the upper pressure block.
2. Select tubing with the wall thickness specified for the pump head.



Figure 4 Tubing insertion sequence

3. Raise the tubing clamp on one side and insert the tubing. Then raise the clamp on the other side and insert the other tubing end; see the tubing clamp drawing.

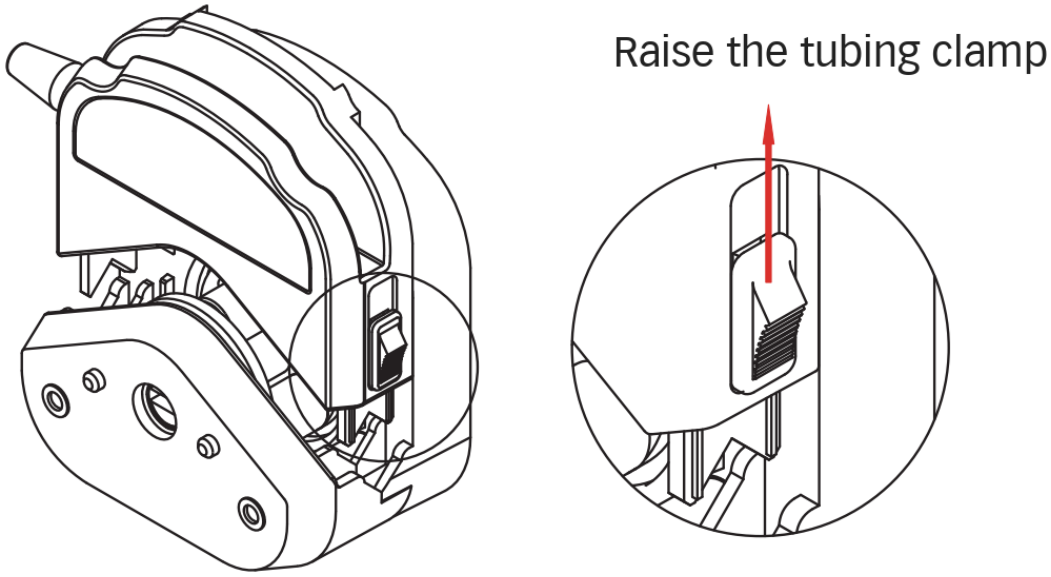

Figure 5 Raising the tubing clamp on the YZ15 or YZ25 design

4. Straighten the tubing inside the head. Hold both ends so that the tubing lies naturally straight, without twisting or sideways displacement.
5. Move the lever to the right into the horizontal position and lower the upper pressure block completely.

Removing tubing

1. Move the lever to the left into the horizontal position and raise the upper pressure block.
2. On YT15, raise the tubing clamps on both sides as shown in the insertion drawing and remove the tubing.

Labmaterial GmbH
Rosenweg 3
6072 Sachseln
+41 77 533 28 21
info@labmaterial.ch

Occlusion gap and operation

Adjustable occlusion gap

After inserting the tubing, adjust the gap with the fine adjustment knob. Turning clockwise reduces the gap and increases the achievable delivery pressure, but shortens tubing life. Turning counterclockwise increases the gap and reduces pressure, but extends tubing life. YT15 has this adjustable occlusion gap.

⚠ **Note**: Do not adjust flow using the fine adjustment knob. High-pressure transfer is not permitted without express approval.

Fine adjustment on YT15

1. Set the drive speed to 1–5rpm.
2. Slowly turn the fine adjustment knob clockwise until flow is continuous and no backflow occurs when stopping.
3. If a higher delivery pressure is required, turn the knob further clockwise. Consider the effect on tubing life.

Within the 1–5rpm adjustment range, select a higher speed for small tubing inner diameters and a lower speed for large inner diameters.

Checking delivery

Flow changes as tubing service time increases. Adjust drive speed in good time; when using flow-controlled operation, recalibrate the flow.

Heads in this family can be stacked. When several heads run simultaneously, flow may differ between channels. Contact Labmaterial GmbH if high uniformity is required.

Daily maintenance

- Check tubing regularly for damage and loss of elasticity.
- Silicone oil on the contact surface of the pressure block can reduce tubing wear and extend tubing life.
- Do not rinse the pump head with water. If tubing breaks during operation, wipe up or dry any escaped liquid immediately.
- Do not use chemical reagents to clean the pump head.

Labmaterial GmbH
Rosenweg 3
6072 Sachseln
+41 77 533 28 21
info@labmaterial.ch

Troubleshooting

No liquid is drawn in

1. Check whether liquid viscosity is too high. Excessive viscosity may greatly reduce or prevent flow.
2. Check the inlet line if vacuum at the tubing inlet is excessive or the inlet is blocked.
3. Reinsert incorrectly fitted tubing according to these instructions.
4. Check that the tubing type is compatible with the head; select a suitable type according to the instructions.
5. On YT15, turn the fine adjustment knob clockwise according to its adjustment procedure until adequate flow is obtained.

Tubing life has become significantly shorter

1. Check whether the liquid contains solid particles. Match the tubing to the liquid. A high particle content can greatly shorten tubing life or render the tubing unusable.
2. Reinsert incorrectly fitted tubing according to these instructions.
3. Check that the rollers turn freely.
4. On YT15, turn the fine adjustment knob counterclockwise according to its adjustment procedure to increase the occlusion gap. Ensure that no backflow occurs when stopping.

Fine adjustment speeds: Use 1–5rpm for YT15: within this range, select a higher speed for small tubing inner diameters and a lower speed for large inner diameters.

⚠ **Note**: If the fault persists after these checks, contact Labmaterial GmbH.

Manufacturer’s warranty and customer service

One-year manufacturer’s warranty for YT15 pump heads

1. Warranty coverage is limited to YT15 pump heads. Tubing and other consumables are excluded.
2. The warranty period starts on the purchase date shown on the valid proof of purchase.
3. For quality defects within the warranty period, the manufacturer provides for free repair or replacement.
4. For problems caused by human action, such as leakage, dropping or improper use, the manufacturer describes repair without labour charges; material costs are charged.

Contact Labmaterial GmbH for clarification and processing.

Special notes on consumables

Before using tubing and other consumables, check the model specifications. Once opened and used, returns and exchanges are no longer accepted except for quality defects.

Disclaimer

The suitability of the pump, pump head and tubing for the intended application must be checked before use. To the extent permitted by law, Labmaterial GmbH accepts no liability for damage caused by improper use, failure to follow these instructions, unauthorised modifications or the use of unsuitable media and tubing. Liability for intent and gross negligence and mandatory statutory product liability remain unaffected.

Labmaterial GmbH
Rosenweg 3
6072 Sachseln
+41 77 533 28 21
info@labmaterial.ch

Tubing and flow performance

YT15 accepts the tubing sizes listed below with a nominal wall thickness of 1.6mm. Inner diameter and wall thickness tolerances affect flow accuracy.

Listed tubing materials and types: silicone, Pharmed, Viton, Tygon 3603, Norprene Chemical, and Norprene A-60-F and A-60-G. This list is a technical compatibility overview and does not confirm chemical compatibility with every liquid. Other types listed in the YT15 family reference are F5500A, 2275 and 2475.

Tubing	ID	mL/rev	600rpm
#13	0.8mm	0.06	36mL/min
#14	1.6mm	0.23	140mL/min
#19	2.4mm	0.56	340mL/min
#16	3.1mm	0.87	520mL/min
#25	4.8mm	2.0	1'200mL/min
#17	6.4mm	3.3	2'000mL/min
#18	7.9mm	4.5	2'700mL/min

Flow rates at different speeds

Speed rpm	#13	#14	#19	#16	#25	#17	#18
30	1.8	6.9	17	26	60	100	130
60	3.6	14	35	50	120	200	270
100	6	23	56	90	200	330	450
300	18	70	170	260	590	990	1'350
600	36	140	340	520	1'200	2'000	2'700

Table 2 Reference flow rates per channel in mL/min

The flow data apply to water and silicone tubing at normal temperature and pressure. Inlet and outlet lines are each 500mm long, with inlet and outlet at the same height. Liquid properties, viscosity, line length and pressure differences affect delivery. The mL/rev values are rounded; the measurement points are not recalculated from them.

Also observe the drive's permitted speed and calibrate the flow for the specific application. The complete tubing list does not describe our scope of delivery or product range.

Labmaterial GmbH
Rosenweg 3
6072 Sachseln
+41 77 533 28 21
info@labmaterial.ch

Dimensions and multi-head operation

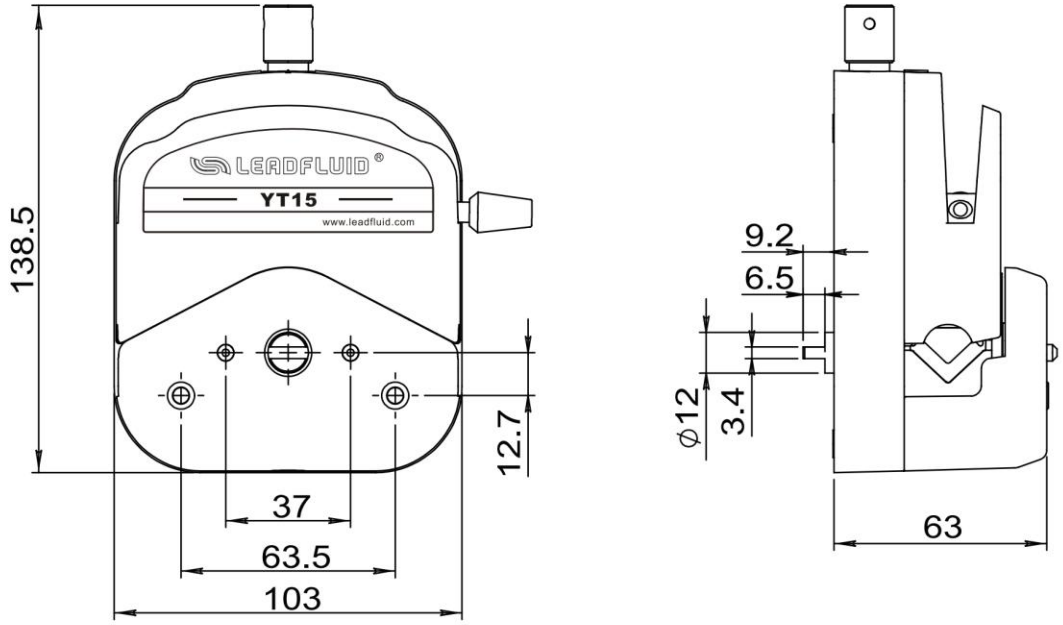

Figure 6 YT15 installation and connection dimensions in mm

The drawing shows the individual pump head. Height × width × depth: 138.5 × 103 × 63mm. Do not use the connection dimensions as the overall dimensions of a complete pump.



Figure 7 Stacking up to four YT15 pump heads

The head design allows stacking for up to four delivery channels. Each head carries its own tubing. The specific extension must be compatible with the coupling, mounting arrangement and load capacity of the drive used.

For two stacked heads, the manufacturer describes a 45° roller offset to reduce pulsation. Flow may differ between channels; check each channel where requirements are high.

The design can be combined with different drive types, such as stepper, servo, AC or DC motors. This does not approve any mechanical coupling or every drive. Contact Labmaterial GmbH for a suitable combination.

Labmaterial GmbH
Rosenweg 3
6072 Sachseln
+41 77 533 28 21
info@labmaterial.ch

Tubing life

The laboratory comparison shows how tubing material and speed affect service life in YT15. The figures in hours guide tubing selection; they are not guaranteed replacement intervals.

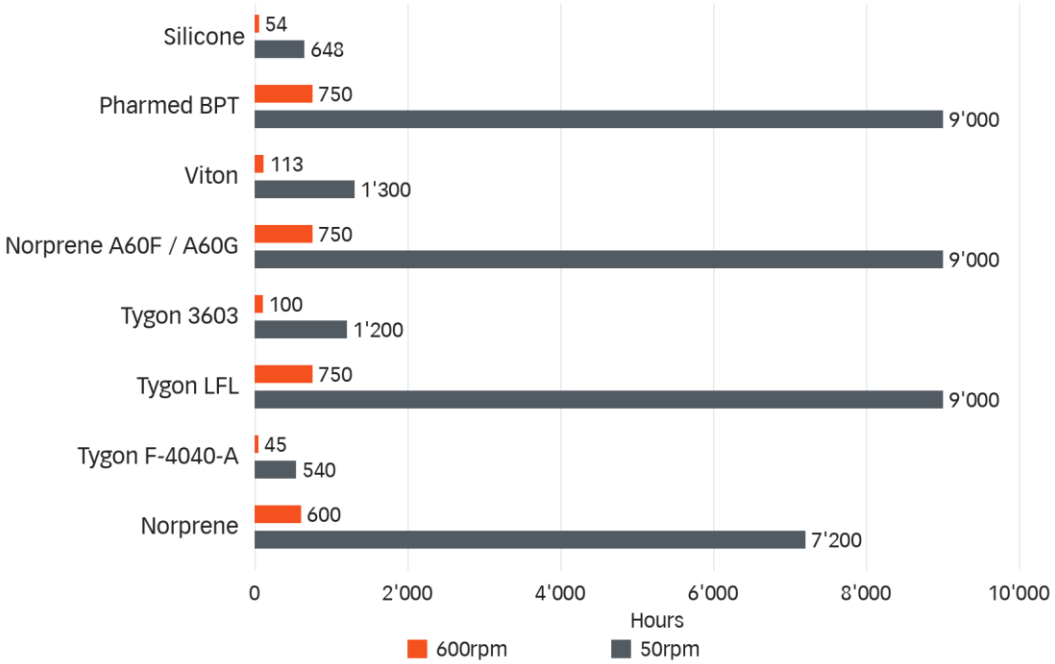

Figure 8 Comparison at 50rpm and 600rpm

Tubing material	At 600rpm	At 50rpm
Silicone	54	648
Pharmed BPT	750	9'000
Viton	113	1'300
Norprene A60F / A60G	750	9'000
Tygon 3603	100	1'200
Tygon LFL	750	9'000
Tygon F-4040-A	45	540
Norprene	600	7'200

Table 3 Laboratory comparison of tubing life in hours

Test conditions: Pure water transfer at normal temperature and pressure. Pressure, temperature, liquid, tubing batch and wall thickness may affect actual life. Material names correspond to the manufacturer's model-specific comparison; do not apply the results generally to other head models or tubing types.

Tubing is a wear part. Check regularly for damage and decreasing elasticity and replace it in good time. Laboratory values do not replace application-specific checks.