labmaterial.ch
Laborgeräte zu fairen Preisen.

Labmaterial GmbH
Rosenweg 3
6072 Sachseln
+41 77 533 28 21
info@labmaterial.ch

Pump head YZ15 Technical data and operating notes

Quick-change pump head with a fixed occlusion gap and self-adjusting tubing clamps. The compatible drive, tubing size and operating conditions determine the usable flow performance.

Features

- Quick tubing changes using the locking lever
- Fixed occlusion gap without a fine-adjustment knob
- Three 304 stainless steel rollers
- Stacking of several heads



Models and our product codes

Model	Product code	Version
YZ15	1701_B3	Single head, three rollers

The cover image shows one design variant. The housing version depends on the head supplied. Our product code applies only to YZ15, not YZ15T or YZ15-6.

Technical overview

Property	Specification
Product code	1701_B3
Tubing sizes	#13, #14, #19, #16, #25, #17, #18
Tubing wall thickness	1.6mm
Tubing inner diameter	0.8 / 1.6 / 2.4 / 3.1 / 4.8 / 6.4 / 7.9mm
Maximum head speed	600rpm; also observe the drive limit
Reference flow at 600rpm	Up to 2'562mL/min with #18; see the model-specific reference table
Rollers	3 × 304 stainless steel
Housing	Black PPS or white PPSU, depending on version
Occlusion gap	Fixed, not adjustable
Channels	1 per head; stacking possible
Dimensions H × W × D	109 × 97 × 54mm
Head weight	0.4kg
Environment	0–40°C; relative humidity <80%

Labmaterial GmbH
Rosenweg 3
6072 Sachseln
+41 77 533 28 21
info@labmaterial.ch

1 Safety instructions

⚠ **Important information: Read the operating instructions carefully before operation.**

Symbol	Meaning
	Warning: Keep fingers away from moving parts.
	Warning: Caution.
	Warning: Caution, hot surface.
	Warning: Caution, electric shock hazard.
	Note: Recycle this product.
	Warning: Wear personal protective equipment.

Table 1 Safety symbols

Danger

⚠ Operate the pump drive only with the power supply stated on its nameplate. Otherwise, the device may be damaged.

⚠ Do not open the drive housing or modify the inside of the device yourself. This may cause malfunctions or electric shock.

Switch off the power before inserting or removing the pump tubing. Keep away from the rotating rollers so that fingers and clothing cannot become caught in the mechanism.

For hazardous liquids, establish a procedure appropriate to the liquid concerned and protect people from injury during use.

1.2 Safety during operation

Before use, check that the liquid does not react chemically with the tubing or pump head. Otherwise, the tubing or head may be damaged. If in doubt, contact Labmaterial GmbH.

Tubing is a wear part and must be checked regularly. To the extent permitted by law, Leadfluid and Labmaterial GmbH accept no responsibility for losses resulting from tubing damage, particularly leaks of toxic, harmful or valuable liquids.

⚠ Only use tubing suitable for the pump head. Observe the compatibility and flow data in 8 Tubing and flow performance.

⚠ During long idle periods, raise the pressure block to prevent the inner tubing walls from sticking together under prolonged compression.

⚠ If actual environmental conditions, such as temperature, humidity or supply voltage, exceed the technical specifications and the device is damaged as a result, this is not covered by the standard manufacturer's warranty. Repair costs will be charged; further consequential damage is not covered by this manufacturer's warranty.

⚠ Protection against injury from moving pump parts is primarily provided by the pump head's safety device. Its design may differ between head models. Follow the instructions for the head actually installed.

⚠ If the pump was running before a power failure, it may restart automatically when power returns. Check the restart setting of the drive being used and prevent unintended restarting.

Labmaterial GmbH
Rosenweg 3
6072 Sachseln
+41 77 533 28 21
info@labmaterial.ch

2 Structure and components

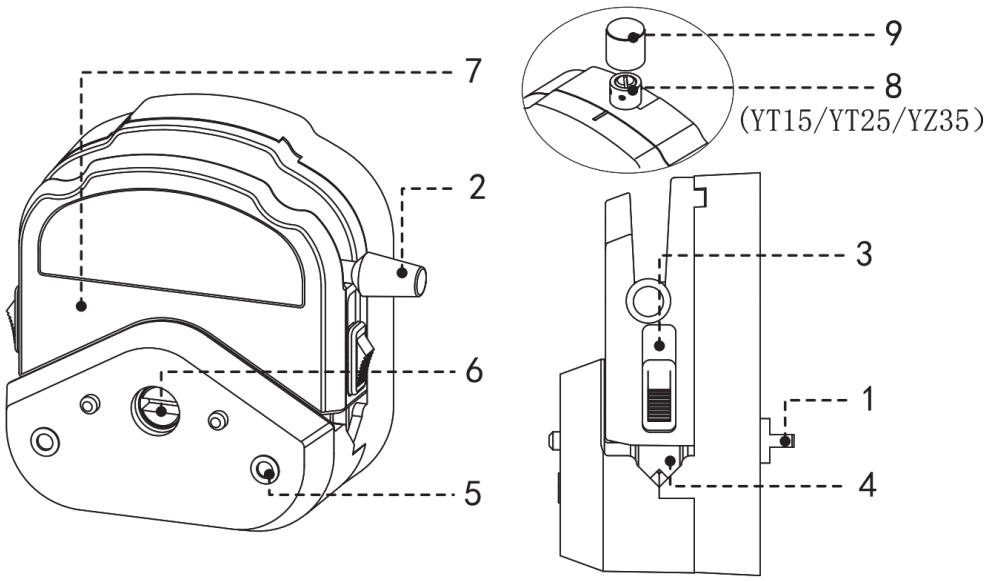

Figure 1 Head family structure; parts 1 to 7 apply to YZ15

1. **Flat shaft end**: Connects to the drive coupling and allows pump heads to be stacked.
2. **Lever**: Operated when inserting the tubing.
3. **Slider**: When pressed down, it compresses the tubing together with the roller assembly.
4. **Tubing clamp**: Prevents the tubing from moving after the slider is pressed down.
5. **Mounting hole**: Receives the screw securing the pump head to the drive.
6. **Coupling**: Connection for stacking pump heads.
7. **Upper pressure block**: Raised or lowered with the lever to release or compress the tubing.

The separate detail view numbered 8 and 9 shows only the fine adjustment of other models in the family. The YZ15 does not have these components.

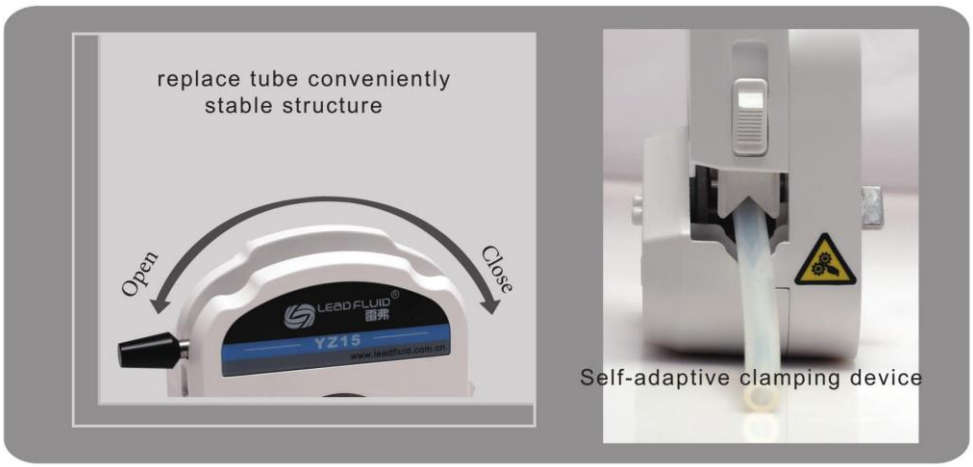

Figure 2 Locking lever and self-adjusting tubing clamp of the YZ15 design

Open means opening, Close means closing. The tubing clamp adapts automatically to a compatible tube.

Labmaterial GmbH
Rosenweg 3
6072 Sachseln
+41 77 533 28 21
info@labmaterial.ch

3 Mounting on the drive

The mounting drawing shows the common fastening principle of the YZ15/YZ25/YT15/YT25 family. The drive and fasteners must be compatible with YZ15.

1. Align the flat shaft end of the pump head with the drive and slide it into the slot in the front drive coupling.
2. Align the pump head with the two locating pins on the bracket and seat it fully against the drive.
3. Insert the two pump head screws through the mounting holes and tighten them.

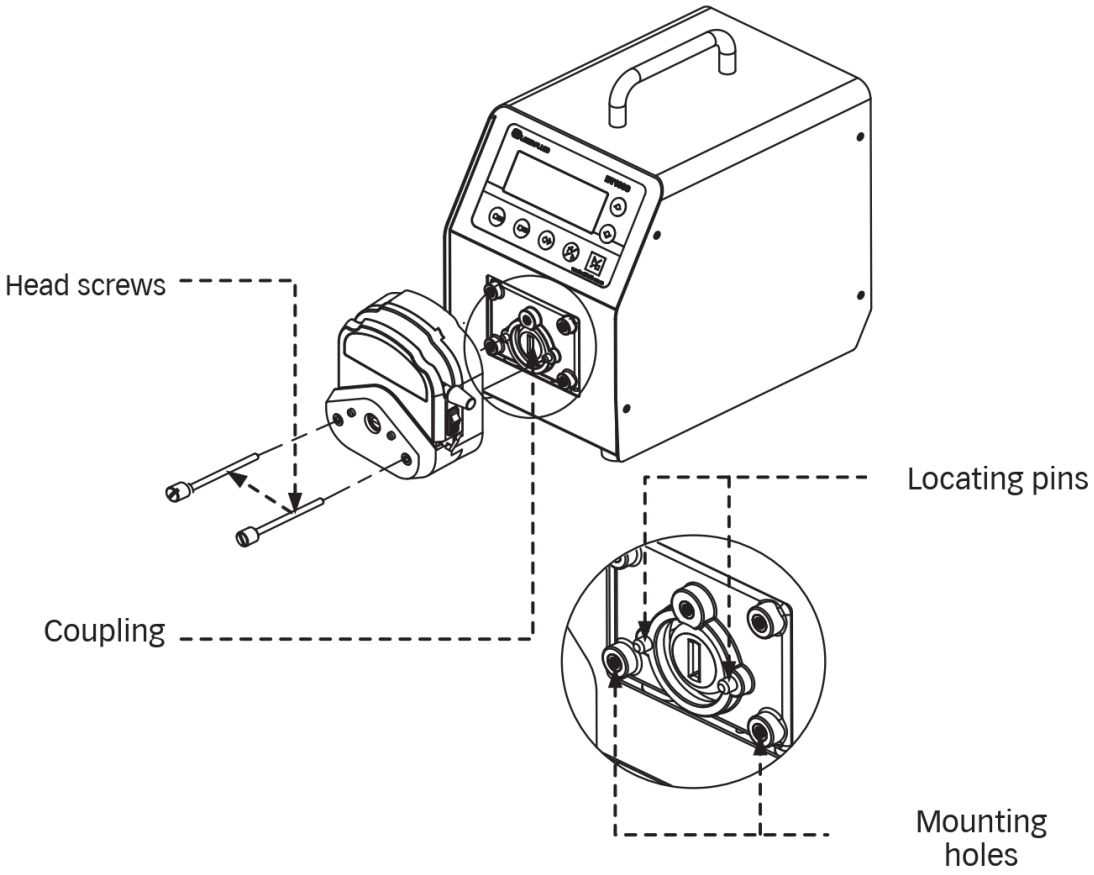

Figure 3 Mounting YZ15 on a compatible drive; drawing of the common head family

⚠ **Note**: Tighten both mounting screws to the same torque and do not overtighten them.

Selecting tubing

Tubing from different manufacturers is available for YT/YZ heads. Wall thickness and inner diameter tolerances affect flow accuracy. Only use the tubing dimensions specified for the particular head.

The nominal wall thickness compatible with YZ15 is 1.6mm. All compatible tubing sizes and flow values are given in 8 Tubing and flow performance.

Labmaterial GmbH
Rosenweg 3
6072 Sachseln
+41 77 533 28 21
info@labmaterial.ch

4 Inserting and removing tubing

Switch off the power before inserting or removing tubing. Keep fingers and clothing away from the rollers.

Inserting tubing

1. Move the lever to the left into the horizontal position and raise the upper pressure block.
2. Select tubing with the wall thickness specified for the pump head.



Figure 4 Tubing insertion sequence

3. Raise the tubing clamp on one side and insert the tubing. Then raise the clamp on the other side and insert the other tubing end; see the tubing clamp drawing.

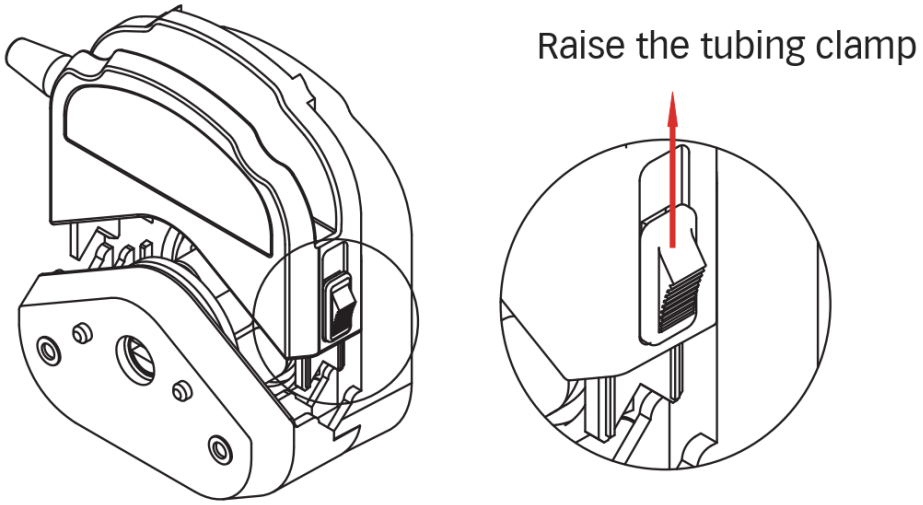

Figure 5 Raising the tubing clamp on the YZ15 or YZ25 design

4. Straighten the tubing inside the head. Hold both ends so that the tubing lies naturally straight, without twisting or sideways displacement.
5. Move the lever to the right into the horizontal position and lower the upper pressure block completely.

Removing tubing

1. Move the lever to the left into the horizontal position and raise the upper pressure block.
2. On YZ15, raise the tubing clamps on both sides as shown in the insertion drawing and remove the tubing.

Labmaterial GmbH
Rosenweg 3
6072 Sachseln
+41 77 533 28 21
info@labmaterial.ch

5 Operation and maintenance

Fixed occlusion gap

On YZ15, the occlusion gap is fixed and cannot be adjusted. After inserting compatible tubing and fully closing the pressure block, no fine adjustment of the head is required.

⚠ **Note**: Set the flow using the drive and calibrate it for the specific application. Do not apply adjustment instructions for heads with a fine-adjustment knob to YZ15.

Checking delivery

Flow changes as tubing service time increases. Adjust drive speed in good time; when using flow-controlled operation, recalibrate the flow.

Heads in this family can be stacked. When several heads run simultaneously, flow may differ between channels. Contact Labmaterial GmbH if high uniformity is required.

Daily maintenance

- Check tubing regularly for damage and loss of elasticity.
- Silicone oil on the contact surface of the pressure block can reduce tubing wear and extend tubing life.
- Do not rinse the pump head with water. If tubing breaks during operation, wipe up or dry any escaped liquid immediately.
- Do not use chemical reagents to clean the pump head.

Labmaterial GmbH
Rosenweg 3
6072 Sachseln
+41 77 533 28 21
info@labmaterial.ch

6 Troubleshooting

No liquid is drawn in

1. Check whether liquid viscosity is too high. Excessive viscosity may greatly reduce or prevent flow.
2. Check the inlet line if vacuum at the tubing inlet is excessive or the inlet is blocked.
3. Reinsert incorrectly fitted tubing according to these instructions.
4. Check that the tubing type is compatible with the head; select a suitable type according to the instructions.

Tubing life has become significantly shorter

1. Check whether the liquid contains solid particles. Match the tubing to the liquid. A high particle content can greatly shorten tubing life or render the tubing unusable.
2. Reinsert incorrectly fitted tubing according to these instructions.
3. Check that the rollers turn freely.

⚠ **Note:** If the fault persists after these checks, contact Labmaterial GmbH.

Labmaterial GmbH
Rosenweg 3
6072 Sachseln
+41 77 533 28 21
info@labmaterial.ch

7 Manufacturer’s warranty and customer service

One-year manufacturer’s warranty for YZ15 pump heads

1. The warranty covers YZ15 pump heads only. Tubing and other consumables are excluded.
2. The warranty period starts on the purchase date shown on the valid proof of purchase.
3. For quality defects within the warranty period, the manufacturer provides for free repair or replacement.
4. For problems caused by human action, such as leakage, dropping or improper use, the manufacturer describes repair without labour charges; material costs are charged.

Contact Labmaterial GmbH for clarification and processing.

Special notes on consumables

Before using tubing and other consumables, check the model specifications. Once opened and used, returns and exchanges are no longer accepted except for quality defects.

Disclaimer

The suitability of the pump, pump head and tubing for the intended application must be checked before use. To the extent permitted by law, Labmaterial GmbH accepts no liability for damage caused by improper use, failure to follow these instructions, unauthorised modifications or the use of unsuitable media and tubing. Liability for intent and gross negligence and mandatory statutory product liability remain unaffected.

Labmaterial GmbH
Rosenweg 3
6072 Sachseln
+41 77 533 28 21
info@labmaterial.ch

8 Tubing and flow performance

YZ15 accepts tubing sizes #13, #14, #19, #16, #25, #17 and #18 with a nominal wall thickness of 1.6mm. The dimensional accuracy of the inner diameter and wall thickness affects flow accuracy.

Listed tubing materials and types: silicone, Pharmed, A-60-G, A-60-F, F5500A, 2275, 2475, 3603 and Viton. This list is a technical manufacturer reference, not a general compatibility approval or a list of our stocked products.

Tubing	1rpm	30rpm	100rpm	350rpm	600rpm
#13	0.05	1.5	5	18	30
#14	0.2	6	20	70	120
#19	0.5	15	50	175	300
#16	0.8	24	80	280	480
#25	1.9	57	190	665	1'140
#17	3	90	300	1'050	1'800
#18	4.3	128	427	1'495	2'562

Table 2 YZ15 reference flow values per channel in mL/min

These are the manufacturer's published YZ15 reference points, not values extrapolated from rounded volumes per revolution. They apply to purified water and silicone tubing under normal laboratory temperature and pressure conditions.

Pressure, temperature, fluid properties, tubing material and other operating conditions affect actual flow performance. For accurate dosing, calibrate the delivery under the actual operating conditions.

⚠ **Note:** Also observe the permitted speed of the installed drive. The technical head reference table does not guarantee flow for every drive combination. The complete tubing list is not a list of items supplied or of our sales range.

Labmaterial GmbH
Rosenweg 3
6072 Sachseln
+41 77 533 28 21
info@labmaterial.ch

9 Dimensions and multi-head operation

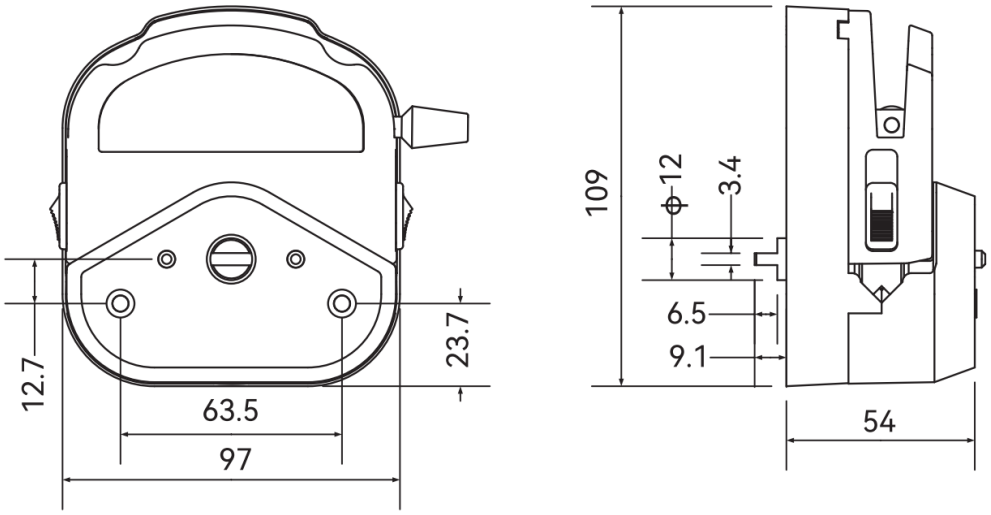

Figure 6 YZ15 mounting and connection dimensions in mm

The drawing shows the YZ15/YZ25 design. For YZ15, height × width × depth is 109 × 97 × 54mm and head weight is 0.4kg. Do not use these dimensions as the overall dimensions of a complete pump.

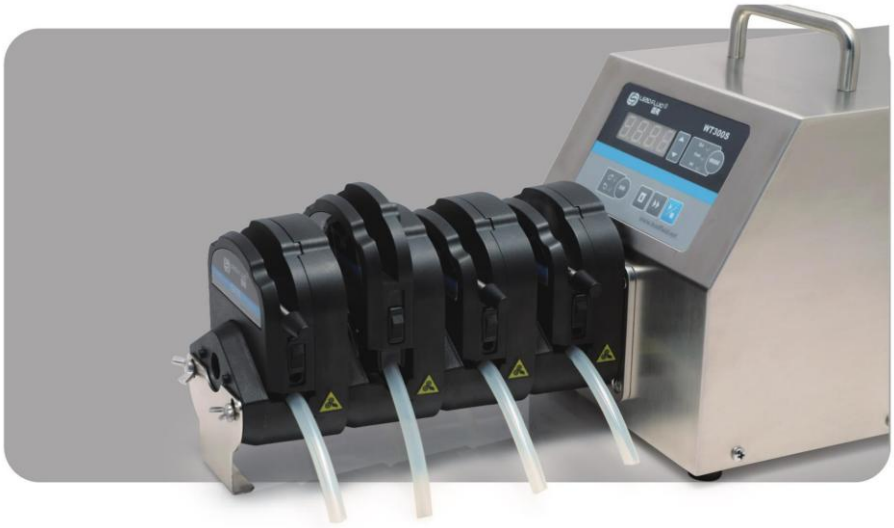

Figure 7 Example of stacked YZ pump heads

The heads can be stacked. Each head carries its own tube. The design document describes up to ten channels; the number actually permitted depends on the coupling, fastening and load capacity of the drive used and must be checked for the specific combination.

For two stacked heads, the design document describes a roller offset of 60° to reduce pulsation. Flow differences may occur between channels; check individual channels where requirements are high.

The head design can be combined with different drive types. This does not approve arbitrary mechanical couplings or every drive. Contact Labmaterial GmbH for a compatible combination.

Labmaterial GmbH
Rosenweg 3
6072 Sachseln
+41 77 533 28 21
info@labmaterial.ch

10 Tubing service life as a laboratory reference

The YZ15/YZ25 head family comparison shows the effect of tubing material and speed on service life. The hours are reference values, not guaranteed replacement intervals.

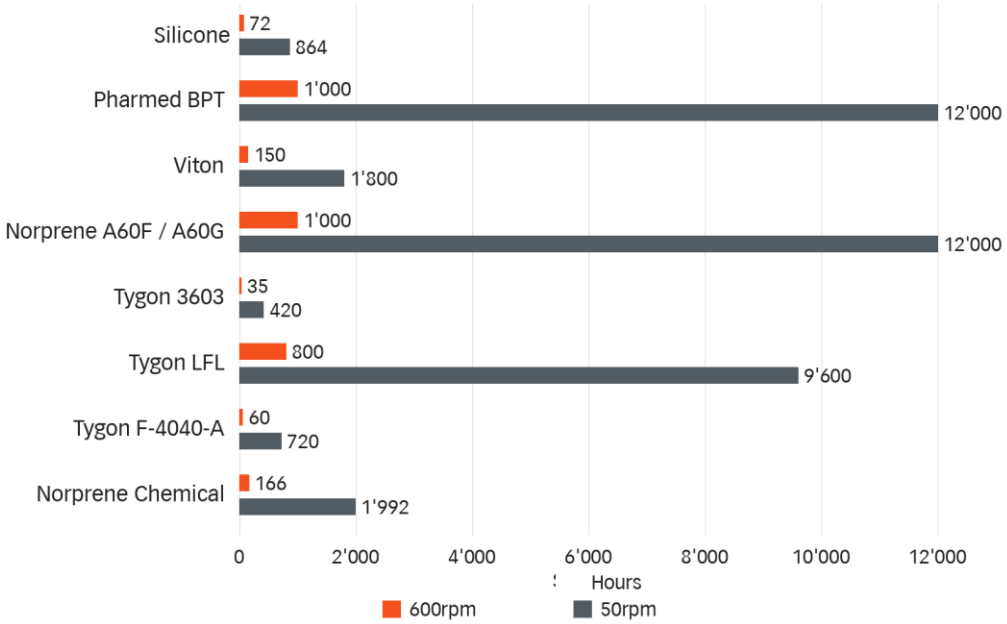

Figure 8 Comparison of YZ15/YZ25 tubing service life at 50rpm and 600rpm

Tubing material	At 600rpm	At 50rpm
Silicone	72	864
Pharmed BPT	1'000	12'000
Viton	150	1'800
Norprene A60F / A60G	1'000	12'000
Tygon 3603	35	420
Tygon LFL	800	9'600
Tygon F-4040-A	60	720
Norprene Chemical	166	1'992

Table 3 YZ15/YZ25 head family laboratory reference in hours

Pressure, temperature, fluid properties, tubing material, tubing batch and wall thickness affect actual service life. These reference values are not a general service-life guarantee for every version or application.

Inspect tubing regularly for damage and reduced elasticity and replace it in good time. Laboratory values do not replace application-specific inspection.