# Lead Fluid Products MODBUS Communication Technology Standards

**No.: Q/B-LF-RDB-1018**

**Version No.: The 18th revision of the first edition**

**Prepared by: Liu Yang** **Date: 2022-04-09**

**Reviewed by: Yuan Jichao** **Date: 2022-04-09**

**Approved by: Zhang Yanfeng** **Date: 2022-04-09**



**Add:** No.1-11, East Park of Equipment Manufacturing, Yangguang Street, Xushui District, Baoding City, Hebei, China
**Tel:** +86-312-6770711
**Web:** www.leadfluid.com

# Modify Record

| No. | Version No. | Date | Prepared | Adjust content |
|---|---|---|---|---|
| 1 | The 11th revision of the first edition | | | |
| 2 | The 12th revision of the first edition | 2017-07-3 | Liu Yang | Add mode description and example |
| 3 | The 13th revision of the first edition | 2018-04-17 | Yuan Jichao | Modify BT-SV2 working mode |
| 4 | The 14th revision of the first edition | 2020-12-8 | Yuan Jichao | Add remarks and modify BT-L and BT-F communication protocols |
| 5 | The 15th revision of the first edition | 2022-04-09 | Shi Tao | Supplementary BT-SV3, BT-F V3 |
| 6 | The 16th revision of the first edition | 2025-09-04 | Liang Yilin | Revise the unclear or incorrect descriptions in the peristaltic pump and syringe pump sections. Separate the Syringe Pump V3 and create an independent table for it. Correct the range of certain registers in the S series peristaltic pumps. |
| 7 | The 17th revision of the first edition | 2026-04-07 | Liang Yilin | Update the table of contents section and add Appendix 3: Syringe Number Reference Table. |
| 8 | The 18th revision of the first edition | 2026-07-23 | Liang Yilin | Removed some redundant registers, added registers for the Explosion-Proof and High-Protection Series, and added Appendix 4 and Appendix 5: LF Peristaltic Pump Head, Tubing Reference List |


**Add:** No.1-11, East Park of Equipment Manufacturing, Yangguang Street, Xushui District, Baoding City, Hebei, China
**Tel:** +86-312-6770711
**Web:** www.leadfluid.com

# Contents

1. Introduction ..... 5
2. Modbus Protocol ..... 5
3. Instructions for Using ..... 7
4. Parameters and Addresses of S Series Peristaltic Pump ..... 8
4.1. Input Register (Not Storable) ..... 8
4.2. Holding Register (Not Storable) ..... 9
4.3. Holding Register (Power Down Can Store EEPROM) ..... 9
5. Parameters and Addresses of L Series Peristaltic Pump ..... 12
5.1. Input Register (Not Storable) ..... 12
5.2. Holding Register (Power Down Storage FRAM) ..... 13
5.3. Holding Register (Power Down Storage RAM) ..... 17
6. Parameters and Addresses of F Series Peristaltic Pump ..... 18
6.1. Input Register (Not Storable) ..... 18
6.2. Holding Register (Power Down Storage FRAM) ..... 20
6.3. Holding Register (Power Down Storage RAM) ..... 27
7. Parameters and Addresses of S Series Gear Pump ..... 27
7.1. Input Register (Not Storable) ..... 27
7.2. Holding Register (Not Stored) ..... 28
7.3. Holding Register (Power-off Memory EEPROM) ..... 28
8. Parameters and Addresses of F Series Gear Pump ..... 28
8.1. Input Register (Not Stored) ..... 29
8.2. Holding Register (Power-off Memory FRAM) ..... 30
8.3. Holding Register (Power-off Memory RAM) ..... 33
9. Parameters and Addresses of Syringe Pump ..... 34
9.1. Setting and Parameter Address Table for Syringe Pump V1/V2 Series ..... 34
9.1.1. Input Register (not stored) ..... 34
9.1.2. Holding Register (Not Stored) ..... 36
9.1.3. Holding Register (Power-off Memory FRAM) ..... 36
9.1.4. Holding Register (Power-off Memory RAM) ..... 40
9.2. Setting and Parameter Address Table for Syringe Pump V3 Series ..... 40
9.2.1. Input Register (not stored) ..... 41
9.2.2. Holding Register (Not Stored) ..... 42
9.2.3. Holding Register (Power-off Memory FRAM) ..... 42
9.2.4. Holding Register (Power-off Memory RAM) ..... 47
10. High-Protection & Explosion-Proof Peristaltic Pump Parameter Address Table ..... 47
10.1 High-Protection & Explosion-Proof Peristaltic Pump Parameter Address Table ..... 47
10.1.1. Input Register (not stored) ..... 48
10.1.2 Holding Register (Power-off Memory FRAM) ..... 49
11. RS485 hardware interface (DB15 pin) for Lead Fluid products ..... 56
12. Example of Communication Protocol Data Frame ..... 57
12.1. Read Input Register ..... 57
12.2. Read and Keep Registers ..... 57
12.3. Write Holding Register ..... 58
12.4. Write Holding Register ..... 59



**Add:** No.1-11, East Park of Equipment Manufacturing, Yangguang Street, Xushui District, Baoding City, Hebei, China
**Tel:** +86-312-6770711
**Web:** www.leadfluid.com

12.5. Read holding register ..... 60
Appendix 1: Solution of hexadecimal to single-precision floating point number ..... 61
Appendix 2: CRC Cyclic Redundancy Check ..... 61
Appendix 3: Syringe Number Reference List ..... 63
Appendix 4: LF Series V1 Peristaltic Pump Head, Tubing Reference List ..... 65
Appendix 5: LF Series V3 Peristaltic Pump Head, Tubing Reference List ..... 67



**Add:** No.1-11, East Park of Equipment Manufacturing, Yangguang Street, Xushui District, Baoding City, Hebei, China
**Tel:** +86-312-6770711
**Web:** www.leadfluid.com

# 1. Introduction

The communication hardware interface of the LEADFLUID series products adopts RS485 and supports the MODBUS protocol. Through this protocol, it is convenient to form centralized monitoring and distributed control with various industrial equipment, and support various industrial controllers (including human-machine interfaces, industrial computers, computers, PLC, etc.). The program adopts modular design which is stable and reliable. This Modbus communication protocol stack includes two layers: the Modbus application layer protocol. Network layer. Our company's products are all transmitted in **RTU** mode.

The currently supported instructions include (Red font instructions are used by the pump)

| Function Code | Command Text | Description |
|---|---|---|
| **0x01** | Read coil state | Get the current state of a group of logic coils (ON/OFF) |
| **0x02** | Read input state | Get the current state of a group of switch inputs (ON/OFF) |
| **0x03** | Read holding register | Get the current binary value in one or more holding registers |
| **0x04** | Read input register | Get the current binary value in one or more input registers |
| **0x05** | Write single coil | Force the on-off state of a logic coil |
| **0x06** | Write a single register | Load the specific binary value into a holding register |
| **0x0F** | Write multiple coils | Force the on-off of a series of continuous logic coils |
| **0x10** | Write multiple registers | Load specific binary values into a series of continuous holding registers |
| **0x11** | Report slave node ID | Enables the host to judge the type of addressing slave and the state of the slave operation indicator |
| **0x17** | Read/write multiple registers | Read and write multiple holding registers at the same time |

# 2. Modbus Protocol

## 2.1. Modbus Protocol Model

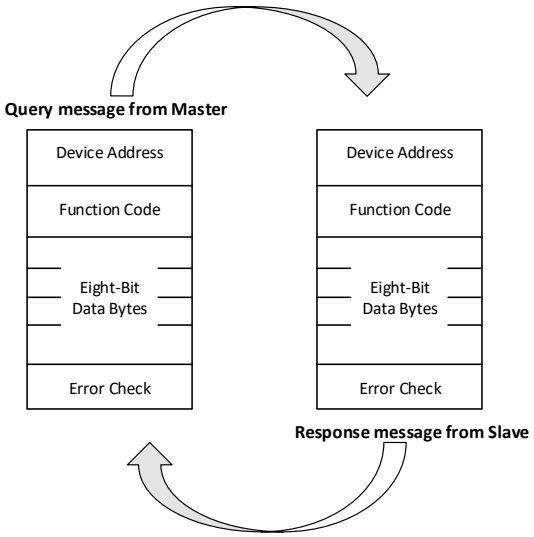


## 2.2. Format of Each Byte


**Add:** No.1-11, East Park of Equipment Manufacturing, Yangguang Street, Xushui District, Baoding City, Hebei, China
**Tel:** +86-312-6770711
**Web:** www.leadfluid.com

Coding system: 8-bit binary, hexadecimal 0-9, A-F
Data bit: 1 start bit
8-bit data, low bit sent first
Even check 1 bit
Stop bit 1 bit
Error check area: cyclic redundancy check (CRC)

## 2.3. Information Frame Format

At the beginning of the message, a rest time of at least 3.5 characters is required. According to the baud rate used, it is easy to calculate the rest time (such as T1-T2-T3-T4 in the figure below). The data of the next area is the device address. The characters allowed in each zone are 0-9, A-F in hexadecimal. The equipment on the network continuously monitors the information on the network, including the rest time. When receiving the first address data, each device immediately decodes it to determine whether it is its own address. After the last word symbol is sent, there is also a rest time of 3.5 characters before a new message can be sent. The entire message must be sent continuously. If a rest time greater than 1.5 characters occurs during the transmission of frame information, the receiving device refreshes the incomplete information and assumes the next address data. A new message sent immediately after the same message (if there is no rest time of 3. 5 characters) will generate an error. This error is caused by the invalid CRC check code of the merged information.

| START | ADDRESS | FUNCTION | DATA | CRC CHECK | END |
|---|---|---|---|---|---|
| T1-T2-T3-T4 | 8 BTI S | 8 BTI S | n x 8 BTI S | 16 BIT S | T1-T2-T3-T4 |

RTU information frame

### 2.3.1. Address Setting

The information address includes 8 bits (RTU), the effective address range of slave device is 0-247, (decimal), and the address range of each slave device is 1-247. The master puts the slave address into the address area of the information frame and addresses the slave. When the slave responds, put its own address into the address area of the response information to let the host recognize the slave address that has responded. The address 0 is the broadcast address, which can be recognized by all slaves. When the Modbus protocol is used for advanced networks, broadcast or its alternative is not allowed. For example, Modbus+uses a token loop to automatically update the shared database.

### 2.3.2. Function Code Setting

The information frame function code includes 8 characters (RTU). Valid codes range from 1-225 (decimal). Some codes are applicable to all types of controllers, while some codes are only applicable to some types of controllers. There is some code left for future use. When the host sends information to the clause, the function code explains the action to be performed to the slave. For example, read the ON/OFF state of a group of discrete coils or input signals, read the data of a group of registers, read the diagnostic state of the slave, write the coils (or registers), and allow the program in the slave to be cut down, recorded, and confirmed. When the slave responds to the host, the function code can indicate that the slave responds normally or has an error (that is, abnormal response). When the slave responds normally, the clause simply returns the original function code. In case of abnormal response, the slave returns a code equal to the original code and sets the most significant bit to "1". For example, if the host requests to read a group of holding registers from the host, the function code of sending information is:

0000 0011 (hex 03)

If the slave receives the requested action information correctly, it returns the same code value as the normal response. When an error is found, an abnormal sound message is returned:

1000 0011 (hex 83)

The slave modifies the function code. In addition, a special code is put into the data area of the response information to tell the host the error type and the reason for abnormal response. The application program of the


**Add:** No.1-11, East Park of Equipment Manufacturing, Yangguang Street, Xushui District, Baoding City, Hebei, China
**Tel:** +86-312-6770711
**Web:** www.leadfluid.com

host device is responsible for handling the abnormal response. The typical processing process is that the host sends the test and diagnosis of the information to the slave and notifies the operator.

### 2.3.3. Content of Data Area

The data area has two hexadecimal data bits and the data range is 00-FF (hexadecimal). According to the mode of network serial transmission, the data area can be composed of a pair of ASCII characters or a RTU character. The information data sent by the master to the slave device includes the request actions specified in the master function code executed by the slave, such as the address of the discrete register, the number of processing objects, and the actual number of data bytes. For example, if the host requests to read a set of registers from the machine (function code 03), the data specifies the starting address of the register and the number of registers. For another example, the host needs to write a set of registers in a slave (the function code is 10H). This data area specifies the starting address to be written to the register area, the number of registers, the number of bytes of data, and the data to be written to the register. If there is no error, the response information from the slave to the host contains the request data. If there is an error, there is an abnormal code in the data, and the host can judge and make the next action. The length of the data area can be "zero" to represent some kind of information, such as the communication event record (function code OBH) of the master request - slave response. At this time, the slave does not need other additional information, and the function code only specifies the action.

### 2.3.4. Error Verification

The standard Modbus bus has two types of error checking methods. The content of the error checking area is filled according to the error checking method used. The error check code is a 16-bit value and two 8-bit bytes. The error check value is the CRC check result of the message content. CRC check information frame is the last data. The obtained check code is sent to the low byte first, and then to the high byte, so the high byte of CRC code is the last transmitted information.

## 2.4. Serial Transmission of Information

In the information transmitted on the standard Modbus, each character or byte is transmitted in the order from left to right: least significant bit: (LSB) most significant bit: (MSB)

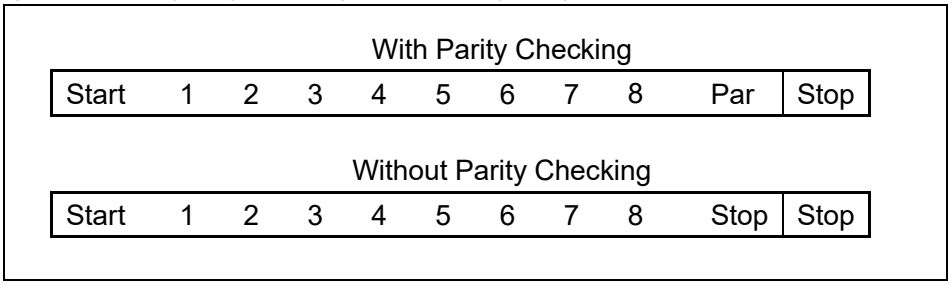


Figure 6 RTU Bit Order

# 3. Instructions for Using

1) During the communication debugging process, first select a single word input register for testing, such as temperature and observe whether the read data matches the display to confirm whether communication is normal. If the data is consistently incorrect, you can try swapping the wiring sequence between A and B.
2) The communication state of the LCD display is determined by the transmission and reception of communication data and is not physically connected.
3) In this technical standard, if there are no special circumstances, it is recommended to use the default byte order CDAB (original communication mode: computer mode) for registers with long integers and floating-point numbers. In byte order ABCD (original communication mode: PLC mode), to ensure data correctness, only one instruction is allowed to read and write to a long integer or single precision floating-point variable at a time. In this mode, if two or more single/double word registers are read and written


**Add:** No.1-11, East Park of Equipment Manufacturing, Yangguang Street, Xushui District, Baoding City, Hebei, China
**Tel:** +86-312-6770711
**Web:** www.leadfluid.com

continuously, error data will be generated.

4) When communicating with devices, there should be a delay of more than 50ms between each instruction frame to ensure the integrity of communication data. Otherwise, it may cause data errors and communication abnormalities, especially in PLC programming and computer programming. Each instruction frame must be manually added
5) When writing registers for flow and liquid volume, it is important to first write the unit before writing the value, otherwise it may cause unit abnormalities and prevent startup
6) Modifying the pump number, communication rate, and check bit all require restarting the device to take effect

# 4. Parameters and Addresses of S Series Peristaltic Pump

**Products:** BQ50S, BQ80S, BT50S, BT102S, BT100S, BT300S, BT600S, BT101S, BT301S, BT601S, WT300S, WT600S, WT600S-65, WG600S, BT100S-1, BT103S

Mode: RTU
Address: 1-247 settable
Communication rate: 9600
Data bit: 8
Check bit: even check (EVEN)
Stop bit: 1

## 4.1. Input Register (Not Storable)

| No. | Address (Decimal) | Name | Function | Data Range | Data Type | Remarks |
|---|---|---|---|---|---|---|
| **1** | 1000 | Reserved | Nothing | | Unsigned Short int (2 bytes) | |
| **2** | 1001 | Value of rotating speed timer | The setting that determines current rotating speed | 200-65535 | Unsigned Short int (2 bytes) | |
| **3** | 1002 | Subdivide number | Step numbers for 1 round | BQ-S:6400<br>BT-S V2:6400<br>BT-S:10000 | Unsigned Short int (2 bytes) | WT series is not displayed |
| **4** | 1003 | Analog speed control | Speed setting controlled by external analog signal | BQ-S:1-800<br>BT100S/BT101S/BT100S-1:1-1500<br>BT300S/BT301S:1-3500<br>BT600S/BT601S:1-6000<br>WT300S:30-350<br>WT600S/WG60 | Unsigned Short int (2 bytes) | |


**Add:** No.1-11, East Park of Equipment Manufacturing, Yangguang Street, Xushui District, Baoding City, Hebei, China
**Tel:** +86-312-6770711
**Web:** www.leadfluid.com

| | | | | | | |
|---|---|---|---|---|---|---|
| | | | | 0S:30-600 | | |
| **5** | 1018 | Manufacturer information | Display manufacturer information | *"Lead Fluid"* | Unsigned Char (10 bytes) | |
| **6** | 1023 | Product information | Display product information | *"BT100S"* *"BT300S"* *"BT600S"* | Unsigned Char (10 bytes) | |

## 4.2. Holding Register (Not Storable)

| No. | Address (Decimal) | Name | Function | Data Range | Data Type | Remarks |
|---|---|---|---|---|---|---|
| **1** | 3000 | Key value | Modify key value | 0-8 | Unsigned Short int (2 bytes) | |
| **2** | 3001 | Easy dispensing state | Easy dispensing is on or not | Normal: 0<br>In dispensing: 1 | Unsigned Short int (2 bytes) | Applicable to BT-S series |
| **3** | 3002 | Current time dispensing state | Check if the time dispensing running | Normal: 0<br>Dispensing: 1 | Unsigned Short int (2 bytes) | Applicable to BT-S V2 series, BQ-S series, WT-S series, WG-S series. BT-S V2 series requires working mode set timing mode |

## 4.3. Holding Register (Power Down Can Store EEPROM)

| No. | Address (Decimal) | Name | Function | Data Range | Data Type | Remarks |
|---|---|---|---|---|---|---|
| **1** | 3100 | Rotating Speed | Adjust rotating speed | BQ-S:1-800<br>BT100S/BT101S/BT100S-1:1-1500<br>BT300S/BT301S:1-3500<br>BT600S/BT601S:1-6000<br>WT300S:30-350<br>WT600S/WG600S:30-600 | Unsigned Short int (2 bytes) | Except for the WT series, the value of/10 for other series is the actual speed, corresponding to the following:<br>BQ-S:0.1-80<br>BT100S/BT101S/BT100S-1:0.1-150<br>BT300S/BT301S:0.1-350<br>BT600S/BT601S:0.1-600 |
| **2** | 3101 | Direction state | Set rotation direction | Clockwise: 0<br>Anticlockwise: | Unsigned Short int | |


**Add:** No.1-11, East Park of Equipment Manufacturing, Yangguang Street, Xushui District, Baoding City, Hebei, China
**Tel:** +86-312-6770711
**Web:** www.leadfluid.com

| | | | | | | |
|---|---|---|---|---|---|---|
| | | | | 1 | (2 bytes) | |
| **3** | 3102 | Running state | Start/stop pump | Stop: 0<br>Start: 1 | Unsigned Short int (2 bytes) | |
| **4** | 3103 | Full speed state | Display full speed state | Normal: 0<br>Full speed: 1 | Unsigned Short int (2 bytes) | |
| **5** | 3104 | Control mode | Set control mode | Internal: 0<br>External: 1<br>Footswitch: 2<br>Level: 3 | Unsigned Short int (2 bytes) | |
| | | | | Internal: 0<br>External: 1<br>Footswitch: 2<br>Level: 3<br>Communicate: 4 | | Applicable to BT101S/BT301S /BT601S/WG600S only |
| | | | | Internal: 0<br>External: 1<br>Dispense: 2<br>Level 1: 3<br>Level 2: 4 | | Applicable to BT100S V2 /BT300S V2 /BT600S V2 /BT100S-1 V2 |
| **6** | 3105 | Easy dispensing volume | Set easy dispensing volume for one micro step | 0-4294967295 | Unsigned Long int(4bytes) | |
| **7** | 3107 | Slave device address | Set Slave device address | 1-99 | Unsigned Short int (2 bytes) | |
| **8** | 3108 | MODBUS mode | Switch MODBUS byte order | CDAB(Original computer mode):0<br>ABCD(Original PLC mode): 1 | Unsigned Short int (2 bytes) | |
| **9** | 3109 | Dispensing time | Set dispensing time | 1-9999 | Unsigned Short int (2 bytes) | Corresponding to 0.1-999．9 |
| **10** | 3110 | Interval time | Interval time between two dispensing processes | 1-9999 | Unsigned Short int (2 bytes) | Applicable to BT-S V2/V3 series, corresponding to 0.1-999.9 only |
| **11** | 3111 | Cycles numbers | Number of cycles | 0-999 | Unsigned Short int (2 bytes) | Applicable to BT-S V2/V3 series only |


**Add:** No.1-11, East Park of Equipment Manufacturing, Yangguang Street, Xushui District, Baoding City, Hebei, China
**Tel:** +86-312-6770711
**Web:** www.leadfluid.com

| | | | | | | |
|---|---|---|---|---|---|---|
| **12** | 3112 | Reverse angle | Set reverse angle | 0-720 | Unsigned Short int (2 bytes) | Applicable to BT-S V2/V3 series only |
| **13** | 3113 | Maximum speed | Maximum speed corresponding to analog quantity | 1-6000 | Unsigned Short int (2 bytes) | Applicable to BT-S V2/V3 series only |
| **14** | 3114 | Language | Set language | 0: English<br>1: Chinese | Unsigned Short int (2 bytes) | Applicable to BT-S V2/V3 series only |
| **15** | 3115 | Beep | Set the Beep to enable or disable | 0: Disable<br>1: Enable | Unsigned Short int (2 bytes) | Applicable to BT-S V2/V3 series only |
| **16** | 3116 | Lock | Set keyboard lock on or off | 0: Unlock<br>1: Lock | Unsigned Short int (2 bytes) | Applicable to BT-S V2/V3 series only |
| **17** | 3117 | Time unit | Unit of operation and interval time | 0: Second<br>1: Minute<br>2: Hour<br>3: Day | Unsigned Short int (2 bytes) | Applicable to BT-S V2/V3 series only |
| | | | | | Running time units do not include interval time units | Applicable to BT-S V3 series only |
| **18** | 3118 | Contrast | Set the contrast of LCD | 1-20 | Unsigned Short int (2 bytes) | Applicable to BT-S V2/V3 series only |
| **19** | | | | | | |
| **20** | 3124 | Acceleration time | Set acceleration time | 1-200 corresponds to 0.1S-20.0S | Unsigned Short int (2 bytes) | Applicable to BT-S V3 series only |
| **21** | 3125 | Deceleration time | Set deceleration time | 1-200 corresponds to 0.1S-20.0S | Unsigned Short int (2 bytes) | Applicable to BT-S V3 series only |
| **22** | 3126 | Step protection | Disable/enable step protection | 0: Disable<br>1: Enable | Unsigned Short int (2 bytes) | Applicable to BT-S V3 series only |
| **23** | 3127 | Interval time unit | Unit of interval time | 0: Second<br>1: Minute<br>2: Hour<br>3: Day | Unsigned Short int (2 bytes) | Applicable to BT-S V3 series only |
| **24** | 3128 | Baud rate | Set baud rate | 0: 4800<br>1: 9600<br>2: 19200<br>3: 38400 | Unsigned Short int (2 bytes) | Applicable to BT-S V3 series only |


**Add:** No.1-11, East Park of Equipment Manufacturing, Yangguang Street, Xushui District, Baoding City, Hebei, China
**Tel:** +86-312-6770711
**Web:** www.leadfluid.com

| | | | | | | |
|---|---|---|---|---|---|---|
| **25** | 3129 | Baud rate stop bit | | 1: bit<br>2: bit | Unsigned Short int (2 bytes) | Applicable to BT-S V3 series only |
| **26** | 3130 | Baud rate verification method | | 0: No parity<br>1: Odd check<br>2: Even check | Unsigned Short int (2 bytes) | Applicable to BT-S V3 series only |

# 5. Parameters and Addresses of L Series Peristaltic Pump

**Products:** BT100L, BT300L, BT600L, BT101L, BT301L, BT601L

Mode: RTU
Address: 1-247 settable
Communication rate: 4800,9600,19200,38400
Data bit: 8
Check bit: even check (EVEN)
Stop bit: 1

## 5.1. Input Register (Not Storable)

| No. | Address (Decimal) | Name | Function | Data Range | Data Type | Remarks |
|---|---|---|---|---|---|---|
| **1** | 1000 | Internal temperature | Check the temperature inside the pump | -100-+100 degrees | Signed Short int (2 bytes) | |
| **2** | 1001 | Reserved | | | Unsigned Short int (2 bytes) | |
| **3** | 1002 | Rotating speed | Check current rotating speed | BT10XL: 0.1-150<br>BT30XL: 0.1-350<br>BT60XL: 0.1-600 | Float (4 bytes) | |
| **4** | 1004 | Steps has run for one cycle dispensing | Check how many steps has run for one cycle dispensing | 0-4294967295 | Unsigned Long int (4 bytes) | |
| **5** | 1006 | Required steps for dispensing and suck-back | Check required steps for dispensing and suck-back | 0-4294967295 | Unsigned long int (4 bytes) | |
| **6** | 1016 | Value of rotating speed timer | The setting that determines current rotating speed | 150-65535 | Unsigned Short int (2 bytes) | |


**Add:** No.1-11, East Park of Equipment Manufacturing, Yangguang Street, Xushui District, Baoding City, Hebei, China
**Tel:** +86-312-6770711
**Web:** www.leadfluid.com

| | | | | | | |
|---|---|---|---|---|---|---|
| **7** | 1018 | Manufacturer information | Display manufacturer information | *"Lead Fluid"* | Unsigned Char (10 bytes) | |
| **8** | 1023 | Product information | Display product information | *"BT10XL"*<br>*"BT30XL"*<br>*"BT60XL"*<br>*V3 Series*<br>*"BT10XLV3"*<br>*"BT30XLV3"*<br>*"BT60XLV3"* | Unsigned Char (10 bytes) | |
| **9** | 1028 | Touch panel X-coordinate | Display touch panel X-coordinate | | Unsigned Short int (2 bytes) | Applicable to V1/V2 series products only |
| **10** | 1029 | Touch panel Y-coordinate | Display touch panel Y-coordinate | | Unsigned Short int (2 bytes) | Applicable to V1/V2 series products only |
| **11** | 1030 | Analog speed | Display analog input speed | BT10XL: 1-1500<br>BT30XL: 1-3500<br>BT60XL: 1-6000 | Unsigned Long int (4 bytes) | Corresponding value<br>BT10XL: 0.1-150<br>BT30XL: 0.1-350<br>BT60XL: 0.1-600 |
| **12** | 1032 | Accumulated liquid volume Checking | Checking the cumulative liquid volume value | | Float (4 bytes) | |
| **13** | 1034 | Accumulated liquid volume unit checking | Checking cumulative liquid volume unit | uL: 1<br>mL: 2<br>L: 3 | Unsigned Short int (2 bytes) | |
| **14** | 1036 | Maximum speed of pump head | Check the current maximum pump head speed | Unit: rpm | Unsigned Short int (2 bytes) | Applicable to BT-L V1 software version above 1.28 ; BT-L V2 and V3 series |
| **15** | 1038 | Maximum flow rate | Check the current maximum flow rate of the tube | Unit: uL | Float (4 bytes) | Applicable to BT-L V1 software version above 1.28 ; BT-L V2 and V3 series |
| **16** | 1040 | Minimum flow rate | Check the current minimum flow rate of the tube | Unit: uL | Float (4 bytes) | Applicable to BT-L V1 software version above 1.28 ; BT-L V2 and V3 series |

## 5.2. Holding Register (Power Down Storage FRAM)

| No. | Address (Decimal) | Name | Function | Data Range | Data Type | Remarks |
|---|---|---|---|---|---|---|


**Add:** No.1-11, East Park of Equipment Manufacturing, Yangguang Street, Xushui District, Baoding City, Hebei, China
**Tel:** +86-312-6770711
**Web:** www.leadfluid.com

| | | | | | | |
|---|---|---|---|---|---|---|
| **1** | 4000 | The leftmost physical value of touch screen | The leftmost physical value of touch screen | | Unsigned Long int (4 bytes) | Applicable to V1/V2 series products only |
| **2** | 4002 | The rightmost physical value of touch screen | The rightmost physical value of touch screen | | Unsigned Long int (4 bytes) | Applicable to V1/V2 series products only |
| **3** | 4004 | The uppermost physical value of touch screen | The uppermost physical value of touch screen | | Unsigned Long int (4 bytes) | Applicable to V1/V2 series products only |
| **4** | 4006 | The down most physical value of touch screen | The down most physical coordinate of touch screen | | Unsigned Long int (4 bytes) | Applicable to V1/V2 series products only |
| **5** | 4008 | Group No. | Set Current Group | Time dispensing for 1-5 groups | Unsigned Short int (2 bytes) | |
| **6** | 4012 | Suck-back speed | Set suck-back speed | 1-600 | Float(4 bytes) | |
| **7** | 4015 | Flow rate in the flow mode | Set the flow rate in the flow mode | 0.001-999.9 | Float (4 bytes) | |
| **8** | 4017 | Working mode | Set different working modes | Flow: 0<br>Time: 1 | Unsigned Short int (2 bytes) | Applicable to BT-L V2/V3 series only |
| **9** | 4018 | Keypad tone | Tone on/off | Tone on: 1<br>Tone off:0 | Unsigned Short int (2 bytes) | |
| **10** | 4019 | Parameter locking | Set parameter locking | Unlock: 0<br>Lock: 1 | Unsigned Short int (2 bytes) | |
| **11** | 4020 | Language | Set language | Chinese: 0<br>English: 1 | Unsigned Short int (2 bytes) | |
| **12** | 4021 | Pump head and tube model | Set unified numbering for pump head and tube models | 0-102 | Unsigned Short int (2 bytes) | |
| **13** | 4022 | Flow rate unit | Set flow rate unit | ul/min 1<br>ml/min 2<br>L/min 3 | Unsigned Short int (2bytes) | |
| **14** | 4023 | Direction state | Set rotation direction | Clockwise: 0<br>Anticlockwise: 1 | Unsigned Short int (2 bytes) | |
| **15** | 4024 | Full speed state | Indicates whether it is at | Normal: 0<br>Full speed: 1 | Unsigned Short int | Applicable to V1/V2 |


**Add:** No.1-11, East Park of Equipment Manufacturing, Yangguang Street, Xushui District, Baoding City, Hebei, China
**Tel:** +86-312-6770711
**Web:** www.leadfluid.com

| | | | | | | |
|---|---|---|---|---|---|---|
| | | | full speed (cleaning) | | (2 bytes) | series products only |
| **16** | 4025 | Dispensing state | Start command in time dispensing Mode | Stop: 0<br>Running: 1 | Unsigned Short int (2 bytes) | |
| **17** | 4026 | External control mode | Set external control mode | Internal: 0<br>Foot switch: 1<br>Current: 2<br>Voltage: 3 | Unsigned Short int (2 bytes) | |
| **18** | 4027 | Reverse angle | Set reverse angle | 0-720 | Unsigned Short int (2 bytes) | |
| **19** | 4028 | Slave address | Set the slave address for communication | 1-247 | Unsigned Short int (2 bytes) | |
| **20** | 4029 | Communication baud rate | Set the number of communication baud rate | 4800bbs: 0<br>9600bbs: 1<br>19200bbs:2<br>38400bbs: 3 | Unsigned Short int (2 bytes) | |
| **21** | 4030 | External control method | Set the method of external control triggering start stop | Pulse: 0<br>Level: 1 | Unsigned Short int (2 bytes) | |
| **22** | 4031 | Infrared enable | Turn infrared function on or off | Disable: 0<br>Enable: 1 | Unsigned Short int (2 bytes) | Applicable to V1/V2 series products only |
| **23** | 4032 | Time dispensing volume | Set the number of microsteps for time dispensing volume | 0-4294967295 | Unsigned Long int (4 bytes) | Applicable to BT-L V1 series |
| **24** | 4034 | Restore default values | Set default values | Restore: 55<br>Normal: 170 | Unsigned Short int (2 bytes) | |
| **25** | 4035 | Discharge Coefficient | | 0.1-99999 | Float (4 bytes) | |
| **26** | 4126 | Running state | Control start stop in flow mode, check whether to run or stop in dispensing mode | Stop: 0<br>Start: 1 | Unsigned Short int (2 bytes) | |
| **27** | 4127 | MODBUS mode | Switch | CDAB (Original | Unsigned | |


**Add:** No.1-11, East Park of Equipment Manufacturing, Yangguang Street, Xushui District, Baoding City, Hebei, China
**Tel:** +86-312-6770711
**Web:** www.leadfluid.com

| | | | | | | |
|---|---|---|---|---|---|---|
| | | | MODBUS bytes order | computer mode) :0 ABCD (Original PLC mode):1 | Short int (2 bytes) | |
| **28** | 4168 | Time dispensing data structure | Set time dispensing parameters | (416 8+6 × N) flow 4bytes floating point (4170+6) × N) running time 2 bytes unsigned (4171+6) × N) downtime 2 bytes unsigned (4172+6) × N) 2nd byte unsigned (4173+6) × N) flow unit 2 bytes unsigned (uL/min=1, mL/min=2, L/min=3) | 12 * 5 bytes, 30 words, N=0-4, a total of five sets of data | Applicable to BT-L V2/V3 series only |
| **29** | 4256 | Communication check bit | Set communication verification method | No parity: 0 Odd check: 1 Even parity check: 2 | Unsigned Short int (2 bytes) | |
| **30** | 4257 | LCD backlight | Set the brightness of the LCD backlight | 0-100 | Unsigned Short int (2 bytes) | Applicable to BT-L V2/V3 series |
| **31** | 4258 | Hours of timed start | Set the hourly value for timed start in flow mode | 0-999 hour | Unsigned Short int (2 bytes) | Applicable to BT-L V2/V3 series |
| **32** | 4259 | Minutes of timed start | Set the minute value for timed start in flow mode | 0-59 minute | Unsigned Short int (2 bytes) | Applicable to BT-L V2/V3 series |
| **33** | 4260 | Seconds of timed start | Set the second value for timed start in flow mode | 0-59 second | Unsigned Short int (2 bytes) | Applicable to BT-L V2/V3 series |
| **34** | 4261 | Hours of timed stop | Set the hourly value for timed start in flow | 0-999 hour | Unsigned Short int (2 bytes) | Applicable to BT-L V2/V3 series |


**Add:** No.1-11, East Park of Equipment Manufacturing, Yangguang Street, Xushui District, Baoding City, Hebei, China
**Tel:** +86-312-6770711
**Web:** www.leadfluid.com

| | | | | | | |
|---|---|---|---|---|---|---|
| | | | mode | | | |
| **35** | 4262 | Minutes of timed stop | Set the minute value for timed start in flow mode | 0-59 minute | Unsigned Short int (2 bytes) | Applicable to BT-L V2/V3 series |
| **36** | 4263 | Seconds of timed stop | Set the second value for timed start in flow mode | 0-59 second | Unsigned Short int (2 bytes) | Applicable to BT-L V2/V3 series |
| **37** | 4265 | Interval time unit | Set interval time units for time dispensing and liquid volume dispensing | Second: 0<br>Minute: 1<br>Hour: 2 | Unsigned Short int (2 bytes) | Applicable to BT-L V2/V3 series |
| **38** | 4267 | Analog speed of 0V | Speed at 0V analog | Value /10<br>Unit: rpm | Unsigned Short int (2 bytes) | Applicable to BT-L V2/V3 series |
| **39** | 4268 | Analog speed of 5V | Speed at 5V analog | Value /10<br>Unit: rpm | Unsigned Short int (2 bytes) | Applicable to BT-L V2/V3 series |
| **40** | 4269 | Analog speed of 4mA | Speed at 4mA analog | Value /10<br>Unit: rpm | Unsigned Short int (2 bytes) | Applicable to BT-L V2/V3 series |
| **41** | 4270 | Analog speed of 20mA | Speed at 20mA analog | Value /10<br>Unit: rpm | Unsigned Short int (2 bytes) | Applicable to BT-L V2/V3 series |
| **42** | 4271 | External control direction control signal | External control signal triggering direction control method | Pulse: 0<br>Level: 1 | Unsigned Short int (2 bytes) | Applicable to BT-L V2/V3 series |
| **43** | 4272 | Pulse control signal | Pulse control method | Descending edge: 0<br>Rising edge: 1 | Unsigned Short int (2 bytes) | Applicable to BT-L V2/V3 series |
| **44** | 4273 | Level control signal | Level control method | Low level: 0<br>High level: 1 | Unsigned Short int (2 bytes) | Applicable to BT-L V2/V3 series |

## 5.3. Holding Register (Power Down Storage RAM)

| No. | Address | Name | Function | Data Range | Data Type | Remarks |
|---|---|---|---|---|---|---|
| **1** | 4800 | Total number of running times | Record cumulative times | 0- 4294967295 | UnSigned Long int (4 bytes) | |
| **2** | 4802 | Total | Record the | 0- 4294967295 | Unsigned | Clearing it to zero |



**Add:** No.1-11, East Park of Equipment Manufacturing, Yangguang Street, Xushui District, Baoding City, Hebei, China
**Tel:** +86-312-6770711
**Web:** www.leadfluid.com

| | | | | | | |
|---|---|---|---|---|---|---|
| | | number of running steps | cumulative steps (equivalent to the cumulative liquid volume) | | Long int (4 bytes) | can achieve the resetting of accumulated liquid volume |

# 6. Parameters and Addresses of F Series Peristaltic Pump

**Products:** BT100F, BT300F, BT600F, BT101F, BT301F, BT601F, BT100F-1, WT300F, WT600F, WG600F

Mode: RTU
Address: 1-247 settable
Communication rate: 4800,9600,19200,38400
Data bit: 8
Check bit: even check (EVEN)
Stop bit: 1

## 6.1. Input Register (Not Storable)

| No. | Address (Decimal) | Name | Function | Data Range | Data Type | Remarks |
|---|---|---|---|---|---|---|
| **1** | 1000 | Internal temperature | Check the temperature inside the pump | -100-+100 degrees | Signed Short int (2 bytes) | |
| **2** | 1001 | Reserved | | | Unsigned Short int (2 bytes) | |
| **3** | 1002 | Rotating speed | Check current rotating speed | BT10XF 0.1-150<br>BT30XF 0.1-350<br>BT60XF 0.1-600 | Float (4 bytes) | |
| **4** | 1004 | Steps has run for one cycle dispensing | Check how many steps has run for one cycle dispensing | 0-4294967295 | Unsigned Long int (4 bytes) | |
| **5** | 1006 | Required steps for dispensing and suck-back | Check required steps for dispensing and suck-back | 0-4294967295 | Unsigned long int (4 bytes) | |
| **6** | 1008 | Current dispensing time | Check current dispensing time | 0-4294967295 | Unsigned long int (4 bytes) | |
| **7** | 1010 | Current dispensing volume | Check current dispensing volume | 0-4294967295 | Unsigned Long int (4 bytes) | |
| **8** | 1012 | Current | Check current | 0-4294967295 | Unsigned | |


**Add:** No.1-11, East Park of Equipment Manufacturing, Yangguang Street, Xushui District, Baoding City, Hebei, China
**Tel:** +86-312-6770711
**Web:** www.leadfluid.com

| | | | | | | |
|---|---|---|---|---|---|---|
| | | dispensing times | dispensing times | | Long int (4 bytes) | |
| **9** | 1016 | Value of rotating speed timer | The setting that determines current rotating speed | 150-65535 | Unsigned Short int (2 bytes) | |
| **10** | 1018 | Manufacturer information | Display manufacturer information | *"LeadFluid"* | Unsigned Char (10 bytes) | |
| **11** | 1023 | Product information | Display product information | *"BT100F"*<br>*"BT300F"*<br>*"BT600F"*<br>*V3 Series:*<br>*"BT10XFV3"*<br>*"BT30XFV3"*<br>*"BT60XFV3"* | Unsigned Char (10 bytes) | |
| **12** | 1028 | Touch panel X-coordinate | Display touch panel X-coordinate | | Unsigned Short int (2 bytes) | Applicable to the V1/V2 series only |
| **13** | 1029 | Touch panel Y-coordinate | Display touch panel Y-coordinate | | Unsigned Short int (2 bytes) | Applicable to the V1/V2 series only |
| **14** | 1030 | Analog speed control | Display analog input speed | BT10XF: 1-1500<br>BT30XF: 1-3500<br>BT60XF: 1-6000 | Unsigned Long int (4 bytes) | Corresponding value<br>BT10XF: 0.1-150<br>BT30XF: 0.1-350<br>BT60XF: 0.1-600 |
| **15** | 1032 | Accumulated liquid volume checking | Checking the cumulative liquid volume value | | Float (4 bytes) | |
| **16** | 1034 | Accumulated liquid volume unit checking | Checking cumulative liquid volume unit | uL: 1<br>mL: 2<br>L: 3 | Unsigned Short int (2 bytes) | |
| **17** | 1036 | Maximum speed of pump head | Check the current maximum pump head speed | Unit: rpm | Unsigned Short int (2 bytes) | Applicable to BT-F V1 software version 1.28 or above BT-L V2/V3 |
| **18** | 1038 | maximum flow rate | Check the current maximum flow rate of the tube | Unit: uL | Float (4 bytes) | Applicable to BT-F V1 software version 1.28 or above BT-L V2/V3 |
| **19** | 1040 | Minimum flow rate | Check the current minimum flow rate of the tube | Unit: uL | Float (4 bytes) | Applicable to BT-F V1 software version 1.28 or above BT-L V2/V3 |


**Add:** No.1-11, East Park of Equipment Manufacturing, Yangguang Street, Xushui District, Baoding City, Hebei, China
**Tel:** +86-312-6770711
**Web:** www.leadfluid.com

## 6.2. Holding Register (Power Down Storage FRAM)

| No. | Address (Decimal) | Name | Function | Data Range | Data Type | Remarks |
|---|---|---|---|---|---|---|
| 1 | 4000 | The leftmost physical value of touch screen | The leftmost physical value of touch screen | | Unsigned Long int (4 bytes) | Applicable to the V1/V2 series only |
| 2 | 4002 | The rightmost physical value of touch screen | The rightmost physical value of touch screen | | Unsigned Long int (4 bytes) | Applicable to the V1/V2 series only |
| 3 | 4004 | The uppermost physical value of touch screen | The uppermost physical value of touch screen | | Unsigned Long int (4 bytes) | Applicable to the V1/V2 series only |
| 4 | 4006 | The down most physical value of touch screen | The down most physical value of touch screen | | Unsigned Long int (4 bytes) | Applicable to the V1/V2 series only |
| 5 | 4008 | Group No. | Set Current Group | Volume dispensing for1-5 groups Time dispensing for 1-5 groups | Unsigned Short int (2 bytes) | |
| 6 | 4012 | Suck-back speed | Set suck-back speed | 1-600 | Float(4 bytes) | |
| 7 | 4015 | Flow rate in the flow mode | Set the flow rate in the flow mode | 0.001-999.9 | Float (4 bytes) | |
| 8 | 4017 | Working mode | Set different working modes | Flow: 0 Liquid volume dispensing: 1 Time dispensing: 2 Copy: 3 | Unsigned Short int (2 bytes) | In V2,copy dispensing is a loop dispensing: 3 In V3, copy dispensing is programming mode: 3 Applicable to the BT-F V2/V3 series only |
| 9 | 4018 | Keypad tone | Tone on/off | Tone on: 1 Tone off: 0 | Unsigned Short int (2 bytes) | |
| 10 | 4019 | Parameter locking | Set parameter locking | Unlock: 0 Lock: 1 | Unsigned Short int (2 bytes) | |
| 11 | 4020 | Language | Set language | Chinese: 0 English: 1 | Unsigned Short int (2 bytes) | |
| 12 | 4021 | Pump head and tube model | Set unified numbering for | 0-102 | Unsigned Short int | |



**Add:** No.1-11, East Park of Equipment Manufacturing, Yangguang Street, Xushui District, Baoding City, Hebei, China
**Tel:** +86-312-6770711
**Web:** www.leadfluid.com

| | | | | | | |
|---|---|---|---|---|---|---|
| | | | pump head and tube models | | (2 bytes) | |
| **13** | 4022 | Flow unit | Set flow unit | ul/min: 1<br>ml/min: 2<br>L/min: 3 | Unsigned Short int (2 bytes) | |
| **14** | 4023 | Direction state | Set rotation direction | Clockwise: 0<br>Anticlockwise: 1 | Unsigned Short int (2 bytes) | |
| **15** | 4024 | Full speed state | Indicates whether it is at full speed (cleaning) | Normal: 0<br>Full speed: 1 | Unsigned Short int (2 bytes) | Applicable to the V1/V2 series only |
| **16** | 4025 | Dispensing state | Start to run in dispensing mode | Stop: 0<br>Running: 1 | Unsigned Short int (2 bytes) | Time dispensing, volume dispensing, copy dispensing (cycle dispensing /programming mode) belongs to dispensing mode |
| **17** | 4026 | External control mode | Set external control mode | Internal control: 0<br>Foot switch: 1<br>Current: 2<br>Voltage: 3 | Unsigned Short int (2 bytes) | |
| **18** | 4027 | Reverse angle | Set reverse angle | 0-720 | Unsigned Short int (2 bytes) | |
| **19** | 4028 | Slave address | Set the slave address for communication | 1-247 | Unsigned Short int (2 bytes) | |
| **20** | 4029 | Communication baud rate | Set the number of communication baud rate | 4800bbs 0<br>9600bbs 1<br>19200bbs 2<br>38400bbs 3 | Unsigned Short int (2 bytes) | |
| **21** | 4030 | External control method | Set the method of external control triggering start stop | Pulse: 0<br>Level: 1 | Unsigned Short int (2 bytes) | |
| **22** | 4031 | Infrared enable | Turn infrared function on or off | Disable: 0<br>Enable: 1 | Unsigned Short int (2 bytes) | Applicable to the V1/V2 series only |
| **23** | 4034 | Restore default values | Set default values | Restore: 55<br>Normal: 170 | Unsigned Short int (2 bytes) | |
| **24** | 4035 | Discharge Coefficient | | 0.1-99999 | Float (4 bytes) | |


**Add:** No.1-11, East Park of Equipment Manufacturing, Yangguang Street, Xushui District, Baoding City, Hebei, China
**Tel:** +86-312-6770711
**Web:** www.leadfluid.com

| | | | | | | |
|---|---|---|---|---|---|---|
| **25** | 4126 | Running state | Control start stop in flow mode, check whether to run or stop in dispensing mode | Stop: 0<br>Start: 1 | Unsigned Short int (2 bytes) | |
| **26** | 4127 | MODBUS mode | Switch MODBUS bytes order | CDAB(Original computer mode) : 0<br>ABCD(Original PLC mode): 1 | Unsigned Short int (2 bytes) | |
| **27** | 4128 | Liquid volume dispensing data structure | Set liquid volume dispensing parameters | (4128+8 × N) Flow 4 bytes floating point<br>(4130+8) × N) Liquid volume 4 bytes floating point<br>(4132+8) × N) Downtime 2 bytes unsigned<br>(4133+8) × N) 2nd byte unsigned<br>(4134+8) × N) The unit of liquid volume is 2 bytes, unsigned (1 in microliters, 2 in milliliters, and 3 in liters)<br>(4135+8) × N) Flow unit 2 bytes unsigned (uL/min=1, mL/min=2, L/min=3) | 16*5 bytes 40 words N=0-4, a total of five sets of data | |
| **28** | 4168 | Time dispensing data structure | Set time dispensing parameters | (416 8+6 × N) Flow 4 bytes floating point<br>(4170+6) × N) Running time 2 bytes unsigned<br>(4171+6) × N) Downtime 2 bytes unsigned<br>(4172+6) × N) 2nd | 12 * 5 bytes, 30 words, N=0-4, a total of five sets of data | Applicable to the BT-F V2/V3 series only |


**Add:** No.1-11, East Park of Equipment Manufacturing, Yangguang Street, Xushui District, Baoding City, Hebei, China
**Tel:** +86-312-6770711
**Web:** www.leadfluid.com

| | | | | | | |
|---|---|---|---|---|---|---|
| | | | | byte unsigned (4173+6) × N) Flow unit 2 bytes unsigned (uL/min=1, mL/min=2, L/min=3) | | |
| **29** | 4198 | Copy dispensing data structure | Set replication dispensing parameters | (4198+8) × N) Flow 4 bytes floating point (4200+8 × N) Total liquid volume 4 bytes floating point (4202+8 × N) Downtime 2 bytes unsigned (4203+8 × N) 2nd byte unsigned (4204+8 × N) The unit of total liquid volume is 2 bytes, unsigned (1 in microliters, 2 in milliliters, and 3 in liters) (4205+8 × N) Flow unit 2 bytes unsigned (uL/min=1, mL/min=2, L/min=3) | 16*5 bytes 40 words N=0-4, a total of five sets of data | Applicable to BT-F V1 series |
| **30** | 4256 | Communication check bit | Set communication verification method | No parity: 0 Odd check: 1 Even parity check: 2 | Unsigned Short int (2 bytes) | |
| **31** | 4257 | LCD backlight | Set the brightness of the LCD backlight | 0-100 | Unsigned Short int (2 bytes) | Applicable to BT-F V2/V3 series |
| **32** | 4258 | Hours of timed start | Set the hourly value for timed start in flow mode | 0-999 hour | Unsigned Short int (2 bytes) | Applicable to BT-F V2/V3 series |
| **33** | 4259 | Minutes of timed start | Set the minute value for timed | 0-59 minute | Unsigned Short int | Applicable to BT-F V2/V3 series |


**Add:** No.1-11, East Park of Equipment Manufacturing, Yangguang Street, Xushui District, Baoding City, Hebei, China
**Tel:** +86-312-6770711
**Web:** www.leadfluid.com

| | | | | | | |
|---|---|---|---|---|---|---|
| | | | start in flow mode | | (2 bytes) | |
| **34** | 4260 | Seconds of timed start | Set the second value for timed start in flow mode | 0-59 second | Unsigned Short int (2 bytes) | Applicable to BT-F V2/V3 series |
| **35** | 4261 | Hours of timed stop | Set the hourly value for timed start in flow mode | 0-999 hour | Unsigned Short int (2 bytes) | Applicable to BT-F V2/V3 series |
| **36** | 4262 | Minutes of timed stop | Set the minute value for timed start in flow mode | 0-59 minute | Unsigned Short int (2 bytes) | Applicable to BT-F V2/V3 series |
| **37** | 4263 | Seconds of timed stop | Set the second value for timed start in flow mode | 0-59 second | Unsigned Short int (2 bytes) | Applicable to BT-F V2/V3 series |
| **38** | 4265 | Interval time unit | Set interval time units for time dispensing and liquid volume dispensing | Second: 0<br>Minute: 1<br>Hour: 2 | Unsigned Short int (2 bytes) | Applicable to BT-F V2/V3 series |
| **39** | 4267 | Analog speed of 0V | Speed at 0V analog | Value /10<br>Unit: rpm | Unsigned Short int (2 bytes) | Applicable to BT-F V2/V3 series |
| **40** | 4268 | Analog speed of 5V | Speed at 5V analog | Value /10<br>Unit: rpm | Unsigned Short int (2 bytes) | Applicable to BT-F V2/V3 series |
| **41** | 4269 | Analog speed of 4mA | Speed at 4mA analog | Value /10<br>Unit: rpm | Unsigned Short int (2 bytes) | Applicable to BT-F V2/V3 series |
| **42** | 4270 | Analog speed of 20mA | Speed at 20mA analog | Value /10<br>Unit: rpm | Unsigned Short int (2 bytes) | Applicable to BT-F V2/V3 series |
| **43** | 4271 | External control direction control signal | External control signal triggering direction control method | Pulse: 0<br>Level: 1 | Unsigned Short int (2 bytes) | Applicable to BT-F V2/V3 series |
| **44** | 4272 | Pulse control signal | Pulse control method | Descending edge: 0<br>Rising edge: 1 | Unsigned Short int (2 bytes) | Applicable to BT-F V2/V3 series |
| **45** | 4273 | Level control signal | Level control method | Low level: 0<br>High level: 1 | Unsigned Short int (2 bytes) | Applicable to BT-F V2/V3 series |


**Add:** No.1-11, East Park of Equipment Manufacturing, Yangguang Street, Xushui District, Baoding City, Hebei, China
**Tel:** +86-312-6770711
**Web:** www.leadfluid.com

| | | | | | | |
|---|---|---|---|---|---|---|
| **46** | 4275 | Transfer mode | Flow transfer mode | Flow mode: 0<br>Time mode: 1 | Unsigned Short int (2 bytes) | Applicable to BT-F V3 series |
| **47** | 4276 | Flow unit | The unit of transmitted liquid volume | Volume unit: 0<br>Weight unit: 1 | Unsigned Short int (2 bytes) | Applicable to BT-F V3 series |
| **48** | 4277 | Locked rotor alarm | Locked rotor alarm development | Close: 0<br>Open: 1 | Unsigned Short int (2 bytes) | Applicable to BT-F V3 series |
| **49** | 4278 | Dispensing completion alarm | Set dispensing alarm values | 50-100<br>(APP pushes an alarm when the dispensing progress reaches the set value) | Unsigned Short int (2 bytes) | Applicable to BT-F V3 series |
| **50** | 4297 | Overall steps of circular dispensing | How many steps are there under cyclic dispensing | 1-30 | Unsigned Short int (2 bytes) | Applicable to BT-F V2/V3 series |
| **51** | 4298 | Total number of cycles | The total number of cycles under cyclic dispensing | 0-999 | Unsigned Short int (2 bytes) | Applicable to BT-F V2/V3 series |
| **52** | 4299 | Display the current parameters | Which step's parameters are displayed on the LCD | 1-30 | Unsigned Short int (2 bytes) | Applicable to BT-F V2/V3 series |
| **53** | 4300 | Programming mode data structure | Set programming mode data parameters | (4300+10 × N) flow 4 bytes floating point<br>(4302+10 × N) liquid volume 4 bytes floating point<br>(4304+10 × N) Unsigned interval of 2 bytes<br>(4305+10 × N) number of cycles 2 bytes unsigned<br>(4306+10 × N) liquid volume unit 2 bytes, unsigned (1 in microliters, 2 in milliliters, and 3 in liters) | 20 * 30 bytes, 300 words, N=0-29, a total of 30 sets of data | Applicable to BT-F V2/V3 series |


**Add:** No.1-11, East Park of Equipment Manufacturing, Yangguang Street, Xushui District, Baoding City, Hebei, China
**Tel:** +86-312-6770711
**Web:** www.leadfluid.com

| | | | | | | |
|---|---|---|---|---|---|---|
| | | | | (4307+10 × N) flow unit 2 bytes unsigned (uL/min=1, mL/min=2, L/min=3) (4308+10 × N) interval unit 2 bytes unsigned (seconds are 0, minutes are 1, and hours are 2) (4309+10 × N) rotation direction 2 bytes unsigned (0 clockwise, 1 counterclockwise) | | |
| **54** | 4600 | Time dispensing data structure (Supplementary 4168) | Set time dispensing parameters | (4600+2 × N) time running time unit 2 bytes unsigned (4601+2 × N) downtime unit 2 bytes unsigned (seconds are 0, minutes are 1, and hours are 2) | 4 * 5 bytes, 10 words, N=0-4, a total of five sets of data | Applicable to BT-F V2/V3 series |
| **55** | 4610 | Liquid volume dispensing data structure (Supplementary 4128) | Set liquid volume dispensing parameters | (4610+4 × N) running time 4 bytes floating point (4130+4 × N) running time unit 2 bytes unsigned (4132+3) × N) downtime unit 2 bytes unsigned (seconds are 0, minutes are 1, and hours are 2) | 8*5 bytes words, N=0-4, a total of five sets of data | Applicable to BT-F V2/V3 series |
| **56** | 4630 | Programming mode data structure (Supplementary 4300) | Set programming mode and parameters | (4630+3) × N) running time 4 bytes floating point (4630+3) × N) running time unit 2 bytes unsigned (seconds are 0, minutes are 1, and hours are 2) | 6 * 30 bytes, 90 words, N=0-29, a total of 30 sets of data | Applicable to BT-F V2/V3 series |


**Add:** No.1-11, East Park of Equipment Manufacturing, Yangguang Street, Xushui District, Baoding City, Hebei, China
**Tel:** +86-312-6770711
**Web:** www.leadfluid.com

### 6.3. Holding Register (Power Down Storage RAM)

| No. | Address | Name | Function | Data Range | Data Type | Remarks |
|---|---|---|---|---|---|---|
| **1** | 4800 | Total number of running times | Record cumulative times | 0- 4294967295 | UnSigned Long int (4 bytes) | |
| **2** | 4802 | Total number of running steps | Record the cumulative steps (equivalent to the cumulative liquid volume) | 0- 4294967295 | Unsigned Long int (4 bytes) | |

## 7. Parameters and Addresses of S Series Gear Pump

**Products:** CT3000S, CT3001

Mode: RTU
Addresses: 1-247 (User Defined)
Baud Rate: 9600
Data Bits: 8
CRC: Even Parity
Stop Bit: 1

### 7.1. Input Register (Not Storable)

| No. | Address (Decimal) | Name | Function | Data Range | Data Type | |
|---|---|---|---|---|---|---|
| **1** | 1000 | Reserved | None | | Unsigned Short int (2 bytes) | |
| **2** | 1001 | Value of rotating speed timer | The setting that determines current rotating speed | 99-998 | Unsigned Short int (2 bytes) | |
| **3** | 1003 | Analog speed control | Speed setting controlled by external analog signal | 300-3000rpm | Unsigned Short int (2 bytes) | |
| **4** | 1018 | Manufacturer information | Display manufacturer information | *"LeadFluid"* | Unsigned Char (10 bytes) | |
| **5** | 1023 | Product information | Display product information | *"CT3000S" "CT3001S"* | Unsigned Char (10 bytes) | |


**Add:** No.1-11, East Park of Equipment Manufacturing, Yangguang Street, Xushui District, Baoding City, Hebei, China
**Tel:** +86-312-6770711
**Web:** www.leadfluid.com

## 7.2. Holding Register (Not Stored)

| No. | Address (Decimal) | Name | Function | Data Range | Data Type | |
|---|---|---|---|---|---|---|
| 1 | 3000 | Key value | Modify key value | | Unsigned Short int (2 bytes) | |
| 3 | 3002 | Current time dispensing state | Check if the time dispensing running | Stopped: 0<br>Dispensing: 1 | Unsigned Short int (2 bytes) | |

## 7.3. Holding Register (Power-off Memory EEPROM)

| No. | Address (Decimal) | Name | Function | Data Range | Data Type | |
|---|---|---|---|---|---|---|
| 1 | 3100 | Rotating speed | Adjust rotating speed | 300-3000rpm | Unsigned Short int (2 bytes) | |
| 2 | 3102 | Running state | Start/stop pump | Stop: 0<br>Start: 1 | Unsigned Short int (2 bytes) | |
| 3 | 3103 | Full speed state | Display full speed state | Normal: 0<br>Full speed: 1 | Unsigned Short int (2 bytes) | |
| 4 | 3104 | Control mode | External, foot switch, or internal control modes | Internal: 0<br>External: 1<br>Footswitch: 2<br>Level: 3 | Unsigned Short int (2 bytes) | |
| 5 | 3107 | Slave device address | Set Slave device address | 1-247 | Unsigned Short int (2 bytes) | |
| 6 | 3108 | MODBUS mode | Switch MODBUS mode | Computer: 0<br>PLC: 1 | Unsigned Short int (2 bytes) | |
| 7 | 3109 | Dispensing time | Set dispensing time | 1-9999（0.1-999.9 s） | Unsigned Short int (2 bytes) | |
| | | | | | | |
| | | | | | | |

# 8. Parameters and Addresses of F Series Gear Pump

**Products:** CT3000F, CT3001F
Mode: RTU
Address: 1-247 settable


**Add:** No.1-11, East Park of Equipment Manufacturing, Yangguang Street, Xushui District, Baoding City, Hebei, China
**Tel:** +86-312-6770711
**Web:** www.leadfluid.com

Communication rate: 4800, 9600, 19200, 38400
Data bit: 8
CRC: Even Parity
Stop bit: 1

## 8.1. Input Register (Not Stored)

| No. | Address (Decimal) | Name | Function | Data Range | Data Type | |
|---|---|---|---|---|---|---|
| **1** | 1000 | Internal temperature | Check the temperature inside the pump | -100-+100 degrees | Signed Short int (2 bytes) | |
| **2** | 1001 | Reserved | | | Unsigned Short int (2 bytes) | |
| **3** | 1002 | Rotating speed | Check current rotating speed | 50-3000rpm | Unsigned Short int (2 bytes) | |
| **4** | 1004 | Current running step | Check current running step | 0-4294967295 | Unsigned Long int (4 bytes) | |
| **5** | 1006 | Requisite running steps | Check requisite running steps | 0-4294967295 | Unsigned long int (4 bytes) | |
| **6** | 1008 | Current dispensing time | Check the current dispensing time (unit:0.01 seconds) | 0-4294967295 | Unsigned long int (4 bytes) | |
| **7** | 1010 | Current dispensing volume | Check current dispensing volume (unit: μL) | 0-4294967295 | Unsigned Long int (4 bytes) | |
| **8** | 1012 | Current dispensing times | Check current dispensing times | 0-4294967295 | Unsigned Long int (4 bytes) | |
| **9** | 1016 | Value of rotating speed timer | The setting that determines current rotating speed | 720-43200 | Unsigned Short int (2 bytes) | |
| **10** | 1018 | Manufacturer information | Display manufacturer information | *"LeadFluid"* | Unsigned Char (10 bytes) | |
| **11** | 1023 | Product information | Display product information | *"CT3000F"* *"CT3001F"* | Unsigned Char (10 bytes) | |


**Add:** No.1-11, East Park of Equipment Manufacturing, Yangguang Street, Xushui District, Baoding City, Hebei, China
**Tel:** +86-312-6770711
**Web:** www.leadfluid.com

| | | | | | | |
|---|---|---|---|---|---|---|
| **12** | 1028 | Touch panel X coordinate | Display touch panel the X coordinate | | Unsigned Short int (2 bytes) | |
| **13** | 1029 | Touch panel Y coordinate | Display touch panel the Y coordinate | | Unsigned Short int (2 bytes) | |
| **14** | 1030 | Analog speed control | Display | *50-3000rpm* | Unsigned Long int (4 bytes) | |
| **15** | 1032 | Cumulative volume | Check cumulative volume | | Float (4 bytes) | |
| **16** | 1034 | Unit of cumulative volume | Check unit of cumulative volume | μL: 1<br>mL: 2<br>L: 3 | Unsigned Short int (2 bytes) | |
| **17** | 1980 | Error log (20 groups) | Check error log | | Unsigned Short int (2 bytes) | |

## 8.2. Holding Register (Power-off Memory FRAM)

| No. | Address (Decimal) | Name | Function | Data Range | Data Type | |
|---|---|---|---|---|---|---|
| **1** | 4000 | The leftmost physical value of touch screen | The leftmost physical value of touch screen | | Unsigned Long int (4 bytes) | |
| **2** | 4002 | The rightmost physical value of touch screen | The rightmost physical value of touch screen | | Unsigned Long int (4 bytes) | |
| **3** | 4004 | The uppermost physical value of touch screen | The uppermost physical value of touch screen | | Unsigned Long int (4 bytes) | |
| **4** | 4006 | The down most physical value of touch | The down most physical value of touch screen | | Unsigned Long int (4 bytes) | |


**Add:** No.1-11, East Park of Equipment Manufacturing, Yangguang Street, Xushui District, Baoding City, Hebei, China
**Tel:** +86-312-6770711
**Web:** www.leadfluid.com

| | | | | | | |
|---|---|---|---|---|---|---|
| | | screen | | | | |
| **5** | 4008 | Dispensing parameter group setting | Set dispensing parameter group | Group 1: 0<br>Group 2: 1<br>Group 3: 2<br>Group 4: 3 | Unsigned Short int (2 bytes) | |
| **6** | 4015 | Flow rate | Flow rate setting for flow mode | 0.001-999.9 | Float (4 bytes) | |
| **7** | 4017 | Working mode | Working mode setting | Flow: 0<br>Volume: 1<br>Time: 2<br>Copy: 3 | Unsigned Short int (2 bytes) | |
| **8** | 4018 | Key tone | Tone on/off | Tone on: 1<br>Tone off: 0 | Unsigned Short int (2 bytes) | |
| **9** | 4019 | Parameter lock | Set parameter lock | Unlock: 0<br>Lock: 1 | Unsigned Short int (2 bytes) | |
| **10** | 4020 | Language | Language setting | Chinese: 0<br>English: 1 | Unsigned Short int (2 bytes) | |
| **11** | 4021 | Model of pump head | Pump head setting | MS204: 0<br>MS209: 7<br>MS213: 9 | Unsigned Short int (2 bytes) | |
| **12** | 4022 | Flow rate unit | Flow rate unit for flow mode | uL/min: 1<br>mL/min: 2<br>L/min: 3 | Unsigned Short int (2 bytes) | |
| **13** | 4024 | Full speed | Full speeding setting (cleaning) | Normal: 0<br>Full speed: 1 | Unsigned Short int (2 bytes) | |
| **14** | 4025 | Dispensing state | Start to dispensing | Stopped: 0<br>Running: 1 | Unsigned Short int (2 bytes) | |
| **15** | 4026 | Control mode | Control mode setting | Internal : 0<br>Footswitch: 1<br>Voltage: 2<br>Current: 3 | Unsigned Short int (2 bytes) | |
| **16** | 4028 | Slave device address | Slave device address | 1-247 | Unsigned Short int (2 bytes) | |
| **17** | 4029 | Baud rate | Baud rate setting | 4800bbs 0<br>9600bbs 1<br>19200bbs 2<br>38400bbs 3 | Unsigned Short int (2 bytes) | |
| **18** | 4030 | External control | External control mode setting | Pulse: 0<br>Level: 1 | Unsigned Short int | |


**Add:** No.1-11, East Park of Equipment Manufacturing, Yangguang Street, Xushui District, Baoding City, Hebei, China
**Tel:** +86-312-6770711
**Web:** www.leadfluid.com

| | | | | | | |
|---|---|---|---|---|---|---|
| | | mode | | | (2 bytes) | |
| **19** | 4031 | Infrared remote setting | Turn infrared remote on or off | Disable: 0<br>Enable: 1 | Unsigned Short int (2 bytes) | |
| **20** | 4034 | Restore default values | Set default values | | Unsigned Short int (2 bytes) | |
| **21** | 4035 | Flow rate Coefficient | Flow rate coefficient setting | | Float (4 bytes) | |
| **22** | 4126 | Running state | Running state setting | Stop: 0<br>Start: 1 | Unsigned Short int (2 bytes) | |
| **23** | 4127 | MODBUS mode | Switch MODBUS mode | Computer: 0<br>PLC: 1 | Unsigned Short int (2 bytes) | |
| **24** | 4128 | Volume dispensing data structure | Volume dispensing parameter setting | (4128+8) × N) flow rate 4 bytes float<br>(4130+8) × N) volume 4 bytes float<br>(4132+8) × N) downtime 2 bytes unsigned<br>(4133+8) × N) 2nd byte unsigned<br>(4134+8) × N) liquid volume unit 2 bytes, unsigned (1 in microliters, 2 in milliliters, and 3 in liters)<br>(4135+8) × N) flow unit 2 bytes unsigned (uL/min=1, mL/min=2, L/min=3) | 16 * 5 bytes, 40 words, N=0-4, a total of five sets of data | |
| **25** | 4168 | Time dispensing data structure | Set time dispensing parameter setting | (4168+6) × N) flow 4 bytes float<br>(4170+6) × N) running time 2 bytes unsigned<br>(4171+6) × N) downtime 2 bytes unsigned<br>(4172+6) × N) | 12*5bytes 30 words, N=0-4, a total of five sets of data | |


**Add:** No.1-11, East Park of Equipment Manufacturing, Yangguang Street, Xushui District, Baoding City, Hebei, China
**Tel:** +86-312-6770711
**Web:** www.leadfluid.com

| | | | | | | |
|---|---|---|---|---|---|---|
| | | | | times 2 byte unsigned (4173+6) × N) flow unit 2 bytes unsigned (uL/min=1, mL/min=2, L/min=3) | | |
| **26** | 4198 | Copy dispensing data structure | Set replication dispensing parameter setting | (4198+8) × N) flow 4 bytes floating point (4200+8 × N) total liquid volume 4 bytes floating point (4202+8 × N) downtime 2 bytes unsigned (4203+8 × N) times 2 byte unsigned (4204+8) × N) the unit of total liquid volume is 2 bytes, unsigned (1 in microliters, 2 in milliliters, and 3 in liters) (4205+8 × N) flow unit 2 bytes unsigned (uL/min=1, mL/min=2, L/min=3) | 16*5 bytes 40 words, N=0-4, a total of five sets of data | |

## 8.3. Holding Register (Power-off Memory RAM)

| No. | Address (Decimal) | Name | Function | Data Range | Data Type | |
|---|---|---|---|---|---|---|
| **1** | 4800 | Cumulative running times | Record cumulative running times | 0- 4294967295 | UnSigned Long int (4 bytes) | |
| **2** | 4802 | Cumulative running steps | Record cumulative running times (equivalent to cumulative volume) | 0- 4294967295 | Unsigned Long int (4 bytes) | |


**Add:** No.1-11, East Park of Equipment Manufacturing, Yangguang Street, Xushui District, Baoding City, Hebei, China
**Tel:** +86-312-6770711
**Web:** www.leadfluid.com

# 9. Parameters and Addresses of Syringe Pump

## 9.1. Setting and Parameter Address Table for Syringe Pump V1/V2 Series

**Product:** TYD01-01, TYD01-02, TYD02-01, TYD02-02, TYD02-04, TYD02-10, TYD03-01, TSD01-01, TFD01-01, TFD02-01, TFD03-01

Mode: RTU
Addresses: 1-247 (User Defined)
Baud Rate: 4800, 9600, 19200, 38400
Data Bits: 8
CRC: Even Parity
Stop Bit: 1

### 9.1.1. Input Register (not stored)

| No. | Address (Decimal) | Name | Function | Data Range | Data Type | |
|---|---|---|---|---|---|---|
| **1** | 1000 | Internal temperature | Check the temperature inside the pump | -100-+100 Degrees | Signed Short int (2 bytes) | |
| **2** | 1001 | Reserved | | | Unsigned Short int (2 bytes) | |
| **3** | 1002 | Infuse speed | Check current Infuse speed | 0.001-150rpm | Float (4 bytes) | |
| **4** | 1004 | Current running steps | Check current running steps | 0-4294967295 | Unsigned Long int (4 bytes) | |
| **5** | 1006 | Required steps for current steps | Check required steps for current steps | 0-4294967295 | Unsigned long int (4 bytes) | |
| **6** | 1008 | Current running time | Check current running time | 0-4294967295 | Unsigned long int (4 bytes) | |
| **7** | 1012 | Current completion times | Check current completion times | 0-4294967295 | Unsigned Long int (4 bytes) | |
| **8** | 1016 | Value of rotating speed timer | The setting that determines current rotating speed | 50-65535 | Unsigned Short int (2 bytes) | |
| **9** | 1018 | Manufacturer information | Display manufacturer information | *"LeadFluid"* | Unsigned Char (10 bytes) | |



**Add:** No.1-11, East Park of Equipment Manufacturing, Yangguang Street, Xushui District, Baoding City, Hebei, China
**Tel:** +86-312-6770711
**Web:** www.leadfluid.com

| | | | | | | |
|---|---|---|---|---|---|---|
| **10** | 1023 | Product information | Display product information | *"TYD01"* | Unsigned Char (10 bytes) | |
| **11** | 1028 | Touch panel X-coordinate | Display touch panel X-coordinate | | Unsigned Short int (2 bytes) | |
| **12** | 1029 | Touch panel Y-coordinate | Display touch panel Y-coordinate | | Unsigned Short int (2 bytes) | |
| **13** | 1032 | Cumulative volume | Checking the cumulative volume | | Float (4 bytes) | |
| **14** | 1034 | Unit of cumulative volume | Check unit of cumulative volume | nL: 0<br>μL: 1<br>mL: 2<br>L: 3 | Unsigned Short int (2 bytes) | |
| **15** | 1035 | Consumption of liquid | Checking the value of liquid consumption | | Float (4 bytes) | |
| **16** | 1037 | Liquid consumption unit | Checking liquid consumption unit | nL: 0<br>μL: 1<br>mL: 2 | Unsigned Short int (2 bytes) | |
| **17** | 1038 | Remaining liquid volume | Checking residual liquid volume | | Float (4 bytes) | |
| **18** | 1040 | Remaining liquid unit | Checking liquid volume unit | nL: 0<br>μL: 1<br>mL: 2 | Unsigned Short int (2 bytes) | |
| **19** | 1041 | Withdraw speed | Checking withdraw speed | 0.001-150rpm | Float (4 bytes) | |
| **20** | 1043 | Time consuming | Checking consumption time | 0-4294967295<br>Unit: milliseconds | Unsigned Long int (4 bytes) | |
| **21** | 1045 | Remainder | Checking remaining time | 0-4294967295<br>Unit: milliseconds | Unsigned Long int (4 bytes) | |
| **22** | 1047 | Alarm state | Checking for alarms | Normal: 0<br>Alarm: 1 | Unsigned Short int (2 bytes) | |
| **23** | 1052 | Maximum flow rate | The maximum flow rate of the current syringe | Unit: nL/min | Float (4 bytes) | |
| **24** | 1054 | Minimum flow rate | The minimum flow rate of the current syringe | Unit: nL/min | Float (4 bytes) | |
| **25** | 1056 | Maximum | The maximum flow | nL: 0 | Unsigned | |


**Add:** No.1-11, East Park of Equipment Manufacturing, Yangguang Street, Xushui District, Baoding City, Hebei, China
**Tel:** +86-312-6770711
**Web:** www.leadfluid.com

| | | | | | | |
|---|---|---|---|---|---|---|
| | | flow rate unit | rate unit of the current syringe | μL: 1<br>mL: 2 | Short int<br>(2 bytes) | |
| **26** | 1057 | Minimum flow rate | The minimum flow rate unit of the current syringe | nL: 0<br>μL: 1<br>mL: 2 | Unsigned Short int<br>(2 bytes) | |

### 9.1.2. Holding Register (Not Stored)

| No. | Address (Decimal) | Name | Function | Data Range | Data Type | |
|---|---|---|---|---|---|---|
| **1** | 3001 | Fast infuse | Start or stop quick infuse | Stopped: 0<br>Fast forward:1 | Unsigned Short int<br>(2 bytes) | |
| **2** | 3002 | Fast withdraw | Start or stop quick withdraw | Stopped: 0<br>Fast forward: 1 | Unsigned Short int<br>(2 bytes) | |

### 9.1.3. Holding Register (Power-off Memory FRAM)

| No. | Address | Name | Function | Data Range | Data Type | |
|---|---|---|---|---|---|---|
| **1** | 4000 | The leftmost physical coordinate of touch screen | The leftmost physical coordinate of touch screen | | Unsigned Long int<br>(4 bytes) | |
| **2** | 4002 | The rightmost physical coordinate of touch screen | The rightmost physical coordinate of touch screen | | Unsigned Long int<br>(4 bytes) | |
| **3** | 4004 | The uppermost physical coordinate of touch screen | The uppermost physical coordinate of touch screen | | Unsigned Long int<br>(4 bytes) | |
| **4** | 4006 | The down most physical coordinate of touch screen | The down most physical coordinate of touch screen | | Unsigned Long int<br>(4 bytes) | |
| **5** | 4008 | Number of pre stored parameter groups | Select the number of groups for pre stored parameters | Group 1: 0<br>Group 2: 1<br>Group 3: 2 | Unsigned Short int<br>(2 bytes) | |
| **6** | 4015 | Flow rate | Flow rate in continuous mode | | Float<br>(4 bytes) | |


**Add:** No.1-11, East Park of Equipment Manufacturing, Yangguang Street, Xushui District, Baoding City, Hebei, China
**Tel:** +86-312-6770711
**Web:** www.leadfluid.com

| | | | | | | |
|---|---|---|---|---|---|---|
| **7** | 4017 | Working mode | Working mode setting | Only infuse: 0<br>Only withdraw: 1<br>Withdraw/infuse: 2<br>Infuse/withdraw : 3<br>Continuous: 4 | Unsigned Short int (2 bytes) | |
| **8** | 4018 | Key tone | Key tone setting | Tone off: 0<br>Tone on: 1 | Unsigned Short int (2 bytes) | |
| **9** | 4019 | Parameter lock | Parameter lock setting | Unlock: 0<br>Lock: 1 | Unsigned Short int (2 bytes) | |
| **10** | 4020 | Language | Language setting | Chinese: 0<br>English: 1 | Unsigned Short int (2 bytes) | |
| **11** | 4021 | Syringe number | Syringe number | | Unsigned Short int (2 bytes) | |
| **12** | 4022 | Flow rate units | Flow rate units setting for continuous mode | nL/min: 0<br>uL/ min: 1<br>mL/ min: 2 | Unsigned Short int (2 bytes) | |
| **13** | 4023 | Direction of movement | Current movement direction (can be set in continuous mode) | Withdraw direction: 0<br>Infuse direction: 1 | Unsigned Short int (2 bytes) | |
| **14** | 4024 | Paused state | Pause state setting | Terminate: 0<br>Pause: 1 | Unsigned Short int (2 bytes) | |
| **15** | 4025 | Dispensing state | Start to dispense | Stop: 0<br>Start/Continue:1 | Unsigned Short int (2 bytes) | |
| **16** | 4026 | Control mode | Set external control signal control method: pulse or level (can be set in continuous mode) | Pulse: 0<br>Level: 1 | Unsigned Short int (2 bytes) | |
| **17** | 4027 | Push force | Push force settling | 1-100 | Unsigned Short int (2 bytes) | |
| **18** | 4028 | Slave address | Slave address setting | 1-247 | Unsigned Short int (2 bytes) | |
| **19** | 4029 | Communication baud rate | Set the number of communication | 4800bps 0<br>9600bps 1 | Unsigned Short int | |


**Add:** No.1-11, East Park of Equipment Manufacturing, Yangguang Street, Xushui District, Baoding City, Hebei, China
**Tel:** +86-312-6770711
**Web:** www.leadfluid.com

| | | | | | | |
|---|---|---|---|---|---|---|
| | | | baud rate | 19200bps 2<br>38400bps 3 | (2 bytes) | |
| **20** | 4030 | LCD backlight | Set the brightness of the LCD backlight | 20-100 | Unsigned Short int (2 bytes) | |
| **21** | 4035 | Velocity coefficient | Set the coefficient for custom syringes | | Float (4 bytes) | |
| **22** | 4034 | Restore default values | Set default values | Restore: 55<br>Normal: 170 | Unsigned Short int (2 bytes) | |
| **23** | 4087 | Traffic alarm | Traffic alarm setting | Turn on: 0<br>Turn off: 1 | Unsigned Short int (2 bytes) | |
| **24** | 4088 | Customized syringe ID | Customized syringe ID setting | 0.001-40mm | Float (4 bytes) | |
| **25** | 4090 | Customized syringe volume | Customized syringe volume setting | 0.001-200 | Float (4 bytes) | |
| **26** | 4092 | Custom syringe unit | Set the volume unit of a custom syringe | uL: 1<br>mL: 2 | Unsigned Short int (2 bytes) | |
| **27** | 4093 | Hours of interval time | Hours for interval time setting | 0-999 | Unsigned Short int (2 bytes) | |
| **28** | 4094 | Minutes of interval time | Minutes for interval time setting | 0-59 | Unsigned Short int (2 bytes) | |
| **29** | 4095 | Seconds for interval time | Seconds for interval time setting | 0-59 | Unsigned Short int (2 bytes) | |
| **30** | 4096 | Milliseconds for interval time interval time | Milliseconds for interval time settingtime | 0-99 | Unsigned Short int (2 bytes) | |
| **31** | 4097 | Number of cycles | Set the number of cycles | 0-999 | Unsigned Short int (2 bytes) | |
| **32** | 4126 | Running state | Set whether to run or stop | | Unsigned Short int (2 bytes) | |
| **33** | 4127 | MODBUS mode | Switch MODBUS mode | Computer or PLC | Unsigned Short int (2 bytes) | |
| **34** | 4128 | Only infuse | Set parameters for | 4128+6 * N liquid | 12*3 bytes | |


**Add:** No.1-11, East Park of Equipment Manufacturing, Yangguang Street, Xushui District, Baoding City, Hebei, China
**Tel:** +86-312-6770711
**Web:** www.leadfluid.com

| | | | | | | |
|---|---|---|---|---|---|---|
| | | data structure | infuse only (three sets in total) | volume 4 bytes float<br>4130+6*N fluid infuse4 bytes float<br>4132+6 * N liquid volume unit 2 bytes unsigned<br>4133+6*N infuse flow uniy2 bytes unsigned | 18 words, N=0-2, three sets of data in total | |
| **35** | 4146 | Only withdraw data structure | Set only withdraw parameters (three sets in total) | 4146+6*N liquid volume 4 bytes float<br>4148+6*N withdraw flow 4 bytes float<br>4150+6*N volume unit 2 bytes unsigned<br>4151+6*N withdraw flow unit 2 bytes unsigned | 12*3 bytes<br>18 words, N=0-2, three sets of data in total | |
| **36** | 4164 | Withdraw data structure | Set withdraw parameters (three sets in total) | 4164+10*N liquid volume 4 bytes float<br>4166+10*N infuse flow 4 bytes float<br>4168+10*N withdraw flow 4 bytes floating point<br>4170+10*N volume unit 2 bytes unsigned<br>4171+10*N infuse flow unit 2 bytes unsigned<br>4172+10*N withdraw flow unit 2 bytes unsigned | 20*3 bytes<br>30 words, N=0-2, three sets of data in total | |
| **37** | 4194 | Infuse | Set infuse | 4194+10*N liquid | 20 * 3 bytes, | |


**Add:** No.1-11, East Park of Equipment Manufacturing, Yangguang Street, Xushui District, Baoding City, Hebei, China
**Tel:** +86-312-6770711
**Web:** www.leadfluid.com

| | | | | | | |
|---|---|---|---|---|---|---|
| | | withdraw data structure | withdraw parameters (three sets in total) | volume 4 bytes float 4196+10*N infuse flow 4 bytes float 4198+10*N withdraw flow 4 bytes float 4200+10*N volume unit 2 bytes unsigned 4201+9*N flow unit 2 bytes unsigned 4202+10*N withdraw flow unit 2 bytes unsigned | 30 words, N=0-2, three sets of data in total | |

### 9.1.4. Holding Register (Power-off Memory RAM)

| No. | Address | Name | Function | Data Range | Data Type | |
|---|---|---|---|---|---|---|
| **1** | 4800 | Total number of running times | Record cumulative running times | 0- 4294967295 | UnSigned Long int (4 bytes) | |
| **2** | 4802 | Total number of running steps | Record cumulative running steps (equivalent to cumulative volume) | 0- 4294967295 | Unsigned Long int (4 bytes) | |

## 9.2. Setting and Parameter Address Table for Syringe Pump V3 Series

**Product:** TYD01-01-V3，TYD01-02-V3，TYD02-01-V3，TYD02-02-V3，TYD02-04-V3，TYD02-10-V3，TYD03-01-V3，TSD01-01-V3，TFD01-01-V3，TFD02-01-V3，TFD03-01-V3

Mode: RTU
Addresses: 1-247 (User Defined)
Baud Rate: 4800, 9600, 19200, 38400
Data Bits: 8
CRC: Even Parity
Stop Bit: 1


**Add:** No.1-11, East Park of Equipment Manufacturing, Yangguang Street, Xushui District, Baoding City, Hebei, China
**Tel:** +86-312-6770711
**Web:** www.leadfluid.com

### 9.2.1. Input Register (not stored)

| No. | Address | Name | Function | Data Range | Data Type | |
|---|---|---|---|---|---|---|
| **1** | 1000 | Internal temperature | Check the temperature inside the pump | -100-+100 Degrees | Signed Short int (2 bytes) | |
| **2** | 1001 | Reserved | | | Unsigned Short int (2 bytes) | |
| **3** | 1002 | Infuse speed | Check current Infuse speed | 0.001-150rpm | Float (4 bytes) | |
| **4** | 1004 | Required steps for current steps | Check required steps for current steps | 0-4294967295 | Unsigned Long int (4 bytes) | |
| **5** | 1006 | Remaining running steps | Check the remaining running steps | 0-4294967295 | Unsigned long int (4 bytes) | |
| **6** | 1008 | Current running time | Check current running time Unit:10 ms | 0-4294967295 | Unsigned long int (4 bytes) | |
| **7** | 1012 | Current completion times | Check current completion times | 0-4294967295 | Unsigned Long int (4 bytes) | |
| **8** | 1016 | Value of rotating speed timer | The setting that determines current rotating speed | 50-65535 | Unsigned Short int (2 bytes) | |
| **9** | 1018 | Manufacture r information | Display manufacturer information | *"LeadFluid"* | Unsigned Char (10 bytes) | |
| **10** | 1023 | Product information | Display product information | *"TYD01"* | Unsigned Char (10 bytes) | |
| **11** | 1032 | Cumulative volume | Checking the cumulative volume | | Float (4 bytes) | |
| **12** | 1034 | Unit of cumulative volume | Check unit of cumulative volume | nL: 0<br>μL: 1<br>mL: 2<br>L: 3 | Unsigned Short int (2 bytes) | |
| **13** | 1035 | Consumptio n of liquid | Checking the value of liquid consumption | | Float (4 bytes) | |
| **14** | 1037 | Liquid consumption unit | Checking liquid consumption unit | nL: 0<br>μL: 1<br>mL: 2 | Unsigned Short int (2 bytes) | |



**Add:** No.1-11, East Park of Equipment Manufacturing, Yangguang Street, Xushui District, Baoding City, Hebei, China
**Tel:** +86-312-6770711
**Web:** www.leadfluid.com

| | | | | | | |
|---|---|---|---|---|---|---|
| **15** | 1038 | Remaining liquid volume | Checking residual liquid volume | | Float (4 bytes) | |
| **16** | 1040 | Remaining liquid unit | Checking liquid volume unit | nL: 0<br>μL: 1<br>mL: 2 | Unsigned Short int (2 bytes) | |
| **17** | 1043 | Time consuming | Checking consumption time | 0-4294967295<br>Unit: milliseconds | Unsigned Long int (4 bytes) | |
| **18** | 1045 | Remainder | Checking remaining time | 0-4294967295<br>Unit: milliseconds | Unsigned Long int (4 bytes) | |
| **19** | 1047 | Alarm state | Checking for alarms | Normal: 0<br>Alarm: 1 | Unsigned Short int (2 bytes) | |
| **20** | 1052 | Maximum flow rate | The maximum flow rate of the current syringe | | Float (4 bytes) | |
| **21** | 1054 | Minimum flow rate | The minimum flow rate of the current syringe | Unit: nL/min | Float (4 bytes) | |
| **22** | 1056 | Maximum flow rate unit | The maximum flow rate unit of the current syringe | nL: 0<br>μL: 1<br>mL: 2 | Unsigned Long int (2 bytes) | |
| **23** | 1057 | Minimum flow rate unit | The minimum flow rate unit of the current syringe | nL: 0<br>μL: 1<br>mL: 2 | Unsigned Long int (2 bytes) | |

### 9.2.2. Holding Register (Not Stored)

| No. | Address | Name | Function | Data Range | Data Type | |
|---|---|---|---|---|---|---|
| **1** | 3001 | Fast infuse | Start or stop quick infuse | Stopped: 0<br>Fast forward:1 | Unsigned Short int (2 bytes) | |
| **2** | 3002 | Fast withdraw | Start or stop quick withdraw | Stopped: 0<br>Fast forward: 1 | Unsigned Short int (2 bytes) | |
| | | | | | | |

### 9.2.3. Holding Register (Power-off Memory FRAM)

| No. | Address | Name | Function | Data Range | Data Type | |
|---|---|---|---|---|---|---|
| **1** | 4008 | Number of pre stored parameter | Select the number of groups for pre stored parameters | Group 1: 0<br>Group 2: 1<br>Group 3: 2 | Unsigned Short int (2 bytes) | |


**Add:** No.1-11, East Park of Equipment Manufacturing, Yangguang Street, Xushui District, Baoding City, Hebei, China
**Tel:** +86-312-6770711
**Web:** www.leadfluid.com

| | | | | | | |
|---|---|---|---|---|---|---|
| | | groups | | | | |
| **2** | 4015 | Flow rate | Flow rate in continuous mode | | Float (4 bytes) | |
| **3** | 4017 | Working mode | Working mode setting | Only infuse: 0<br>Only withdraw: 1<br>Withdraw/infuse: 2<br>Infuse/withdraw : 3<br>Continuous: 4 | Unsigned Short int (2 bytes) | |
| **4** | 4018 | Key tone | Key tone setting | Tone on: 1<br>Tone off: 0 | Unsigned Short int (2 bytes) | |
| **5** | 4019 | Parameter lock | Parameter lock setting | Unlock: 0<br>Lock: 1 | Unsigned Short int (2 bytes) | |
| **6** | 4020 | Language | Language setting | Chinese: 0<br>English: 1 | Unsigned Short int (2 bytes) | |
| **7** | 4021 | Syringe number | Syringe number | | Unsigned Short int (2 bytes) | |
| **8** | 4022 | Flow rate units | Flow rate units setting for continuous mode | nL/min: 0<br>uL/ min: 1<br>mL/ min: 2 | Unsigned Short int (2 bytes) | |
| **9** | 4023 | Direction of movement | Current movement direction (In continuous mode, the pulse mode can be configured; in level mode, it cannot be configured ) | Withdraw direction: 0<br>Infuse direction: 1 | Unsigned Short int (2 bytes) | |
| **10** | 4024 | Paused state | Pause state setting | Continue: 0<br>Pause: 1 | Unsigned Short int (2 bytes) | |
| **11** | 4025 | Dispensing state | Start to dispense | Stop: 0<br>Start/Continue:1 | Unsigned Short int (2 bytes) | |
| **12** | 4026 | Control mode | Set external control signal control method: pulse or level (can be set in continuous mode) | Pulse: 0<br>Level: 1 | Unsigned Short int (2 bytes) | |


**Add:** No.1-11, East Park of Equipment Manufacturing, Yangguang Street, Xushui District, Baoding City, Hebei, China
**Tel:** +86-312-6770711
**Web:** www.leadfluid.com

| | | | | | | |
|---|---|---|---|---|---|---|
| **13** | 4027 | Push force | Push force settling | 25%-100% | Unsigned Short int (2 bytes) | |
| **14** | 4028 | Slave address | Slave address setting | 1-247 | Unsigned Short int (2 bytes) | |
| **15** | 4029 | Communication baud rate | Set the number of communication baud rate | 4800bps 0<br>9600bps 1<br>19200bps 2<br>38400bps 3 | Unsigned Short int (2 bytes) | |
| **16** | 4030 | LCD backlight | Set the brightness of the LCD backlight | 20-100 | Unsigned Short int (2 bytes) | |
| **17** | 4034 | Restore default values | Set default values | Restore: 55<br>Normal: 170 | Unsigned Short int (2 bytes) | |
| **18** | 4035 | Velocity coefficient | Set the coefficient for custom syringes | | Float (4 bytes) | |
| **19** | 4087 | Traffic alarm | Traffic alarm setting | Turn on: 0<br>Turn off: 1 | Unsigned Short int (2 bytes) | |
| **20** | 4088 | Customized syringe ID | Customized syringe ID setting | 0.001-40mm | Float (4 bytes) | |
| **21** | 4090 | Customized syringe volume | Customized syringe volume setting | 0.001-200mL | Float (4 bytes) | |
| **22** | 4093 | Hours of interval time | Hours for interval time setting | 0-999 | Unsigned Short int (2 bytes) | |
| **23** | 4094 | Minutes of interval time | Minutes for interval time setting | 0-59 | Unsigned Short int (2 bytes) | |
| **24** | 4095 | Seconds for interval time | Seconds for interval time setting | 0-59 | Unsigned Short int (2 bytes) | |
| **25** | 4096 | Milliseconds for interval time interval time | Milliseconds for interval time setting time | 0-99 | Unsigned Short int (2 bytes) | |
| **26** | 4097 | Number of cycles | Set the number of cycles | 0-999 | Unsigned Short int (2 bytes) | |
| **27** | 4126 | Continuous Running | Set whether to run or stop in | Stopped:0<br>Runing:1 | Unsigned Short int | |


**Add:** No.1-11, East Park of Equipment Manufacturing, Yangguang Street, Xushui District, Baoding City, Hebei, China
**Tel:** +86-312-6770711
**Web:** www.leadfluid.com

| | | | | | | |
|---|---|---|---|---|---|---|
| | | State | continuous mode | | (2 bytes) | |
| **28** | 4127 | MODBUS mode | Switch MODBUS mode | Computer or PLC(CDAB or ABCD) | Unsigned Short int (2 bytes) | |
| **29** | 4128 | Only infuse data structure | Set parameters for infuse only (three sets in total) | 4128+6 * N liquid volume 4 bytes float<br>4130+6*N fluid infuse4 bytes float<br>4132+6 * N liquid volume unit 2 bytes unsigned<br>4133+6*N infuse flow uniy2 bytes unsigned | 12*3 bytes 18 words, N=0-2, three sets of data in total | |
| **30** | 4146 | Only withdraw data structure | Set only withdraw parameters (three sets in total) | 4146+6*N liquid volume 4 bytes float<br>4148+6*N withdraw flow 4 bytes float<br>4150+6*N volume unit 2 bytes unsigned<br>4151+6*N withdraw flow unit 2 bytes unsigned | 12*3 bytes 18 words, N=0-2, three sets of data in total | |
| **31** | 4164 | Withdraw data structure | Set withdraw parameters (three sets in total) | 4164+10*N liquid volume 4 bytes float<br>4166+10*N infuse flow 4 bytes float<br>4168+10*N withdraw flow 4 bytes floating point<br>4170+10*N volume unit 2 bytes unsigned<br>4171+10*N infuse flow unit 2 bytes unsigned | 20*3 bytes 30 words, N=0-2, three sets of data in total | |


**Add:** No.1-11, East Park of Equipment Manufacturing, Yangguang Street, Xushui District, Baoding City, Hebei, China
**Tel:** +86-312-6770711
**Web:** www.leadfluid.com

| | | | | | | |
|---|---|---|---|---|---|---|
| | | | | 4172+10*N withdraw flow unit 2 bytes unsigned | | |
| **32** | 4194 | Infuse withdraw data structure | Set infuse withdraw parameters (three sets in total) | 4194+10*N liquid volume 4 bytes float<br>4196+10*N infuse flow 4 bytes float<br>4198+10*N withdraw flow 4 bytes float<br>4200+10*N volume unit 2 bytes unsigned<br>4201+9*N flow unit 2 bytes unsigned<br>4202+10*N withdraw flow unit 2 bytes unsigned | 20 * 3 bytes, 30 words, N=0-2, three sets of data in total | |
| **33** | 4224 | Only infuse the time data structure | Set only infuse time unit mode parameters (three sets in total) | 4224+4*N infuse time 4 bytes float<br>4226+4*N infuse time unit 2 bytes unsigned | 8*3 bytes 12 words N=0-2, three sets of data in total | |
| **34** | 4236 | Only withdraw the time data structure | Set only withdraw time unit mode parameters (three sets in total) | 4236+4*N withdraw time 4 bytes float<br>4238+4*N withdraw time unit 22 bytes unsigned | 8*3 bytes 12 words N=0-2, three sets of data in total | |
| **35** | 4248 | Withdraw/ infuse the time data structure | Set only withdraw/infuse time unit mode parameters (three sets in total) | 4248+6*N infuse time 4 bytes float<br>4250+6*N withdraw time 4 bytes float<br>4252+6*N infuse time unit 22 bytes unsigned | 12*3 bytes 18 words N=0-2, three sets of data in total | |


**Add:** No.1-11, East Park of Equipment Manufacturing, Yangguang Street, Xushui District, Baoding City, Hebei, China
**Tel:** +86-312-6770711
**Web:** www.leadfluid.com

| | | | | | | |
|---|---|---|---|---|---|---|
| | | | | 4253+6*N withdraw time unit 2 bytes unsigned | | |
| **36** | 4266 | Infuse withdraw the time data structure | Set only infuse/withdraw time unit mode parameters (three sets in total) | 4266+6*N infuse time 4 bytes float<br>4268+6*N withdraw time 4 bytes float<br>4270+6*N infuse time 22 bytes unsigned<br>4271+6*N withdraw time unit 22 bytes unsigned | 12*3 bytes 18 words N=0-2, three sets of data in total | |

### 9.2.4. Holding Register (Power-off Memory RAM)

| No. | Address | Name | Function | Data Range | Data Type | |
|---|---|---|---|---|---|---|
| **1** | 4800 | Total number of running times | Record cumulative running times | 0- 4294967295 | Unsigned Long int (4 bytes) | |
| **2** | 4802 | Total number of running steps | Record cumulative running steps (equivalent to cumulative volume) | 0- 4294967295 | Unsigned Long int (3 bytes) | |

# 10. High-Protection & Explosion-Proof Peristaltic Pump Parameter Address Table

## 10.1 High-Protection & Explosion-Proof Peristaltic Pump Parameter Address Table

**Applicable Products**: MF103, MFX06, MF118, MF116, EF900, EF918, EF933

Mode: RTU

Address: 1 – 247 (Configurable)

Communication Baud Rate: 4800, 9600, 19200, 38400

Data Bits: 8

Parity: Even

Stop Bits: 1



**Add:** No.1-11, East Park of Equipment Manufacturing, Yangguang Street, Xushui District, Baoding City, Hebei, China
**Tel:** +86-312-6770711
**Web:** www.leadfluid.com

### 10.1.1. Input Register (not stored)

| NO. | Address (Decimal) | Name | Function | Range | Data Type | Remarks |
|---|---|---|---|---|---|---|
| 1 | 5000 | Current Speed | Records the current pump speed; 0 when stopped | 0 – 360 RPM | Float (4 bytes) | |
| 2 | 5002 | Analog Input Speed | Records the speed corresponding to the current analog input | 0.1 – 360 RPM | Float (4 bytes) | |
| 3 | 5004 | Current Running Steps | Records the number of steps currently completed | 0- 4294967295 | UnSigned Long int (4 bytes) | |
| 4 | 5006 | Required Running Steps | Records the number of running steps required for a single dispensing operation in dispensing mode | 0- 4294967295 | UnSigned Long int (4 bytes) | Refreshed when operation starts |
| 5 | 5008 | Current Running Time | Records the current elapsed running time | 0 – 4,294,967,295 s | UnSigned Long int (4 bytes) | |
| 6 | 5012 | Current Dispensed Volume | Records the volume currently dispensed | Unit: μL | Float (4 bytes) | |
| 7 | 5016 | Operating Status | Records the current pump operating status | Stop: 0; Run: 1 | Unsigned Short int (2 bytes) | |
| 8 | 5017 | Fault Status | Records the motor fault status | No fault: 0; Fault: 1 | Unsigned Short int (2 bytes) | |
| 9 | 5019 | Motor Status | Records the real-time motor status | Stopped: 0; Running: 1 | Unsigned Short int (2 bytes) | |
| 10 | 5020 | Modbus Connection Status | Detects whether the current Modbus connection is active | ⩾1: Online; 0: Offline | Unsigned Short int (2 bytes) | |
| 11 | 5021 | ADC Value | Records the ADC value | | Unsigned Short int (2 bytes) | |
| 12 | 5024 | Dispensing Time | Current dispensing time in time-dispensing mode | Unit: 10 ms | Unsigned Long Int (4 bytes) | |
| 13 | 5028 | Maximum Flow Rate | Records the maximum flow rate | Unit: μL | Float (4 bytes) | |



**Add:** No.1-11, East Park of Equipment Manufacturing, Yangguang Street, Xushui District, Baoding City, Hebei, China
**Tel:** +86-312-6770711
**Web:** www.leadfluid.com

| | | | | | | |
|---|---|---|---|---|---|---|
| | | of Current Pump Head & Tubing | of the currently configured pump head and tube | | | |
| 14 | 5030 | Minimum Flow Rate of Current Pump Head & Tube | Records the minimum flow rate of the currently configured pump head and tube | Unit: μL | Float (4 bytes) | |
| 15 | 5032 | Accumulated Volume | Records the cumulative volume pumped by the pump | μL: 0;<br>mL: 1;<br>L: 2 | Float (4 bytes) | |
| 16 | 5034 | Accumulated Volume Unit | Records the unit of accumulated volume | μL: 0;<br>mL: 1;<br>L: 2 | Unsigned Short int (2 bytes) | |
| 17 | 5035 | Maximum Applicable Speed of Pump Head | Records the maximum applicable speed of the current pump head | 0 – 3600; Unit: 0.1 RPM | Unsigned Short int (2 bytes) | |
| 18 | 5040 | Accumulated Power-On Time | Records the cumulative power-on time | 0 – 4,294,967,295 s | Unsigned Long Int (4 bytes) | |
| 19 | 5042 | Accumulated Running Time | Records the cumulative running time | 0 – 4,294,967,295 s | Unsigned Long Int (4 bytes) | |
| 20 | 5044 | Accumulated Power-On Count | Records the cumulative number of power-on cycles | 0 – 4,294,967,295 times | Unsigned Long Int (4 bytes) | |
| 21 | 5046 | Accumulated Motor Steps | Records the cumulative number of motor steps | 0 – 4,294,967,295 ustep | Unsigned Long Int (4 bytes) | |

### 10.1.2 Holding Register (Power-off Memory FRAM)

| NO. | Address | Name | Function | Range | Data Type | |
|---|---|---|---|---|---|---|
| 1 | 6000 | Keypad Sound | Enables/disables keypad sound | Off: 0;<br>On: 1 | Unsigned Short int (2 bytes) | |
| 2 | 6002 | System Language | Switches the system language; takes | Simplified Chinese: 0; English: 1 | Unsigned Short int (2 bytes) | |


**Add:** No.1-11, East Park of Equipment Manufacturing, Yangguang Street, Xushui District, Baoding City, Hebei, China
**Tel:** +86-312-6770711
**Web:** www.leadfluid.com

| | | | | | | |
|---|---|---|---|---|---|---|
| | | | effect after restart | | | |
| 3 | 6003 | LCD Backlight | Sets LCD backlight brightness | 20-100 | Unsigned Short int (2 bytes) | |
| 4 | 6006 | Pump Head No. | Sets the pump head | | Unsigned Short int (2 bytes) | |
| 5 | 6007 | Tube No. | Sets the tube | | Unsigned Short int (2 bytes) | |
| 6 | 6008 | Restore Default Settings | Restores factory/default settings | 55: Unused;<br>170: Used | Unsigned Short int (2 bytes) | |
| 7 | 6009 | Communication Address | Sets the Modbus communication address | 1-127 | Unsigned Short int (2 bytes) | |
| 8 | 6010 | RS485 Baud Rate | Sets the Modbus communication baud rate | 9600 0<br>19200 1<br>38400 2<br>115200 3 | Unsigned Short int (2 bytes) | |
| 9 | 6011 | RS485 Parity | Sets the RS485 communication parity | No parity 0<br>Odd check 1<br>Even check 2 | Unsigned Short int (2 bytes) | |
| 10 | 6012 | RS232 Baud Rate | RS232 Baud Rate | 9600 0<br>19200 1<br>38400 2<br>115200 3 | Unsigned Short int (2 bytes) | |
| 11 | 6013 | RS232 Parity | Sets the RS232 interface parity | None: 0;<br>Odd: 1;<br>Even: 2 | Unsigned Short int (2 bytes) | |
| 12 | 6032 | Operating Mode | Sets the pump operating mode | Flow Rate: 0;<br>Volume Dispensing: 1;<br>Time Dispensing: 2;<br>Programming: 3;<br>External Control: 4 | Unsigned Short int (2 bytes) | EFxxx series does not have Programming Mode. MF133 does not have Programming Mode or Volume Dispensing Mode. |
| 13 | 6033 | External Control Mode | Sets the external control method | 0 – 5 V: 0;<br>0 – 10 V: 1;<br>4 – 20 mA: 2; | Unsigned Short int (2 bytes) | |


**Add:** No.1-11, East Park of Equipment Manufacturing, Yangguang Street, Xushui District, Baoding City, Hebei, China
**Tel:** +86-312-6770711
**Web:** www.leadfluid.com

| | | | | | | |
|---|---|---|---|---|---|---|
| | | | | Foot Pedal Mode: 3 | | |
| 14 | 6034 | Start/Stop Control & Status Display | Controls and displays pump start/stop status | Stop: 0;<br>Run: 1 | Unsigned Short int (2 bytes) | |
| 15 | 6035 | Direction Control & Status Display | Controls and displays pump rotation direction | Clockwise: 0;<br>Counterclockwise: 1 | Unsigned Short int (2 bytes) | |
| 16 | 6036 | Full-Speed Control & Status Display | Controls and displays full-speed operation | Non-full-speed: 0;<br>Full-speed: 1 | Unsigned Short int (2 bytes) | |
| 17 | 6037 | Dispensing Control & Status Display | Dispensing control and displays status | Stop: 0;<br>Dispensing: 1 | Unsigned Short int (2 bytes) | |
| 18 | 6038 | External Start/Stop Input Trigger Mode | Sets the trigger mode for the external start/stop input signal | Level: 1;<br>Pulse: 0 | Unsigned Short int (2 bytes) | |
| 19 | 6039 | External Direction Input Trigger Mode | Sets the trigger mode for the external direction input signal | Level: 1;<br>Pulse: 0 | Unsigned Short int (2 bytes) | |
| 20 | 6040 | Start/Stop Input Signal Level/Pulse Control Mode | Sets the level/pulse control mode for the start/stop input signal | Low level (falling edge): 0;<br>High level (rising edge): 1 | Unsigned Short int (2 bytes) | |
| 21 | 6041 | Direction Input Signal Level/Pulse Control Mode | Sets the level/pulse control mode for the direction input signal | Low level (falling edge): 0;<br>High level (rising edge): 1 | Unsigned Short int (2 bytes) | |
| 22 | 6042 | External Output 1 Function Setup | Sets the function of External Output 1 | 0: Start/Stop Status;<br>1: Direction Status;<br>2: Operating Status;<br>3: Fault Status | Unsigned Short int (2 bytes) | |
| 23 | 6043 | External Output 2 Function | Sets the function of External Output 2 | 0: Start/Stop Status;<br>1: Direction Status;<br>2: Operating Status; | Unsigned Short int (2 bytes) | |


**Add:** No.1-11, East Park of Equipment Manufacturing, Yangguang Street, Xushui District, Baoding City, Hebei, China
**Tel:** +86-312-6770711
**Web:** www.leadfluid.com

| | | | | | | |
|---|---|---|---|---|---|---|
| | | Settings | | 3: Fault Status | | |
| 24 | 6044 | External Output 3 Function Settings | Sets the function of External Output 3 | 0: Start/Stop Status;<br>1: Direction Status;<br>2: Operating Status;<br>3: Fault Status | Unsigned Short int<br>(2 bytes) | |
| 25 | 6045 | Motor Alarm | Enables/disables motor alarm | Off: 0;<br>On: 1 | Unsigned Short int<br>(2 bytes) | |
| 26 | 6046 | Speed Corresponding to Analog 0 V | Sets the speed corresponding to 0 V analog input | 0 – 3600;<br>Unit: 0.1 RPM | Unsigned Short int<br>(2 bytes) | |
| 27 | 6047 | Speed Corresponding to Analog 5 V (10 V) | Sets the speed corresponding to 5 V (10 V) analog input | 0 – 3600; Unit: 0.1 RPM | Unsigned Short int<br>(2 bytes) | |
| 28 | 6048 | Speed Corresponding to Analog 4 mA | Sets the speed corresponding to 4 mA analog input | 0 – 3600; Unit: 0.1 RPM | Unsigned Short int<br>(2 bytes) | |
| 29 | 6049 | Speed Corresponding to Analog 20 mA | Sets the speed corresponding to 20 mA analog input | 0 – 3600; Unit: 0.1 RPM | Unsigned Short int<br>(2 bytes) | |
| 30 | 6050 | Calibration Coefficient | Sets the calibration coefficient | | Float (4 bytes) | |
| 31 | 6052 | Calibration Coefficient Reset | Resets the calibration coefficient | Write 1 to reset | Unsigned Short int<br>(2 bytes) | |
| 32 | 6053 | Reversal Angle | Sets the reversal angle | 0-720 | Unsigned Short int<br>(2 bytes) | |
| 33 | 6054 | Reversal Speed | Sets the reversal speed | 60 – 360 RPM | Unsigned Short int<br>(4 bytes) | |
| 34 | 6056 | Dispensing Step | Displays the current dispensing status | 0: Stop;<br>1: Running<br>2: Interval Waiting | Unsigned Short int<br>(2 bytes) | |
| 35 | 6057 | Completed Cycle Count | Displays the number of completed dispensing | | Unsigned Short int<br>(2 bytes) | |


**Add:** No.1-11, East Park of Equipment Manufacturing, Yangguang Street, Xushui District, Baoding City, Hebei, China
**Tel:** +86-312-6770711
**Web:** www.leadfluid.com

| | | | | | | |
|---|---|---|---|---|---|---|
| | | | cycles | | | |
| 36 | 6058 | Current Group in Volume Mode | Selects the group in Volume Mode | 0-4 | Unsigned Short int (2 bytes) | |
| 37 | 6059 | Current Group in Time Mode | Selects the group in Time Mode | 0-4 | Unsigned Short int (2 bytes) | |
| 38 | 6060 | Current Step in Programming Mode | Displays the current step number in Programming Mode | 1~30 | Unsigned Short int (2 bytes) | |
| 39 | 6061 | Sets the total number of steps in Programming Mode | Sets the total number of steps in Programming Mode | 1~30 | Unsigned Short int (2 bytes) | |
| 40 | 6062 | Current Cycle in Programming Mode | Displays the current cycle number in Programming Mode | 0-999 | Unsigned Short int (2 bytes) | |
| 41 | 6063 | Total Cycles in Programming Mode | Sets the total number of cycles in Programming Mode | 0~999 | Unsigned Short int (2 bytes) | |
| 42 | 6080 | Flow Rate | Sets the flow rate in Flow Rate Mode | Resolution: 0.01 | Float (4 字节) | |
| 43 | 6082 | Flow Rate Unit | Sets the flow rate unit in Flow Rate Mode | 0 uL/min<br>1 mL/min<br>2 L/min | Unsigned Short int (2 bytes) | |
| 44 | 6084 | Delayed Start Function in Flow Rate Mode | Enables/disables delayed start | Off: 0;<br>On: 1 | Unsigned Short int (2 bytes) | |
| 45 | 6085 | Delayed Start — Hours | Sets the delayed start time in hours | 0 – 999 h | Unsigned Short int (2 bytes) | |
| 46 | 6086 | Delayed Start — Minutes | Sets the delayed start time in minutes | 0 – 59 min | Unsigned Short int (2 bytes) | |
| 47 | 6087 | Delayed | Sets the delayed | 0 – 59 s | Unsigned Short | |


**Add:** No.1-11, East Park of Equipment Manufacturing, Yangguang Street, Xushui District, Baoding City, Hebei, China
**Tel:** +86-312-6770711
**Web:** www.leadfluid.com

| | | | | | | |
|---|---|---|---|---|---|---|
| | | Start — Seconds | start time in seconds | | int (2 bytes) | |
| 48 | 6088 | Timed Stop Function in Flow Rate Mode | Enables/disables timed stop | Off: 0; On: 1 | Unsigned Short int (2 bytes) | |
| 49 | 6089 | Timed Stop — Hours | Sets the timed stop duration in hours | 0 – 999 h | Unsigned Short int (2 bytes) | |
| 50 | 6090 | Timed Stop — Minutes | Sets the timed stop duration in minutes | 0 – 59 min | Unsigned Short int (2 bytes) | |
| 51 | 6091 | Timed Stop — Seconds | Sets the timed stop duration in seconds | 0 – 59 s | Unsigned Short int (2 bytes) | |
| 52 | 6095 | Clear Accumulated Volume | Clears the accumulated volume | Write 1 to clear | Unsigned Short int (2 bytes) | |
| 53 | 6096 | Volume Dispensing Mode Array Parameters | Sets the parameters for each group in Volume Dispensing Mode | 6096 + 14×N: Flow Rate, 4-byte Float<br>6098 + 14×N: Total Volume, 4-byte Float<br>6100 + 14×N: Dispensing Time, 2-byte Unsigned<br>6101 + 14×N: Interval Time, 2-byte Unsigned<br>6102 + 14×N: Flow Rate Unit, 2-byte Unsigned<br>6103 + 14×N: Volume Unit, 2-byte Unsigned (μL: 0; mL: 1; L: 2)<br>6104 + 14×N: Dispensing Time Unit, 2-byte Unsigned (s: 0; min: 1; h: 2)<br>6105 + 14×N: Interval Time Unit, 2-byte Unsigned (s: 0; min: 1; h: 2) | 14 × 5 bytes<br>70 words<br>N = 0 – 4, 5 groups in total | |


**Add:** No.1-11, East Park of Equipment Manufacturing, Yangguang Street, Xushui District, Baoding City, Hebei, China
**Tel:** +86-312-6770711
**Web:** www.leadfluid.com

| | | | | | | |
|---|---|---|---|---|---|---|
| | | | | 6106 + 14×N: Loop Count<br>6107 + 14×N: Mode (0: Flow Rate – Volume Mode; 1: Time – Volume Mode) | | |
| 54 | 6166 | Time Dispensing Mode Array Parameters | Sets the parameters for each group in Time Dispensing Mode | 6166 + 10×N: Flow Rate, 4-byte Float<br>6168 + 10×N: Dispensing Time, 2-byte Unsigned<br>6169 + 10×N: Interval Time, 2-byte Unsigned<br>6170 + 10×N: Flow Rate Unit<br>6171 + 10×N: Dispensing Time Unit, 2-byte Unsigned (s: 0; min: 1; h: 2)<br>6172 + 10×N: Interval Time Unit, 2-byte Unsigned (s: 0; min: 1; h: 2)<br>6173 + 10×N: Loop Count | 10 × 5 bytes<br>50 words<br>N = 0 – 4, 5 groups in total | |
| 55 | 6216 | Programming Mode Array Parameters | Sets the parameters for each step in Programming Mode | 6216 + 16×N: Flow Rate, 4-byte Float<br>6217 + 16×N: Total Volume, 4-byte Float<br>6220 + 16×N: Dispensing Time, 2-byte Unsigned<br>6221 + 16×N: Interval Time, 2-byte Unsigned<br>6222 + 16×N: Flow Rate Unit<br>6223 + 16×N: Volume Unit, 2-byte Unsigned ( μL: 0; mL: 1; L: 2)<br>6224 + 16×N: | 16 × 30 bytes<br>480 words<br>N = 0 – 29, 30 groups in total | |


**Add:** No.1-11, East Park of Equipment Manufacturing, Yangguang Street, Xushui District, Baoding City, Hebei, China
**Tel:** +86-312-6770711
**Web:** www.leadfluid.com

| | | | | | | |
|---|---|---|---|---|---|---|
| | | | | Dispensing Time Unit, 2-byte Unsigned (s: 0; min: 1; h: 2)<br>6225 + 16×N: Interval Time Unit, 2-byte Unsigned (s: 0; min: 1; h: 2)<br>6226 + 16×N: Loop Count<br>6227 + 16×N: Rotation Direction<br>6228 + 16×N: Disable Channel | | |

## 11. RS485 hardware interface (DB15 pin) for Lead Fluid products

(1) External power supply

Connect the positive end of the external+24V or+12V power supply to the 4-pin VCC_ W connection, connect the negative end with 8-pin COM

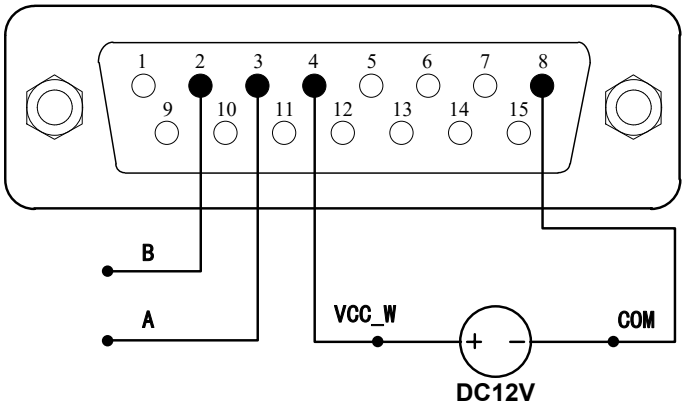


(2) Internal power supply

Connect 10-pin+12V and 4-pin VCC of DB15-pin_ W connection, connect 11-pin GND with 8-pin COM

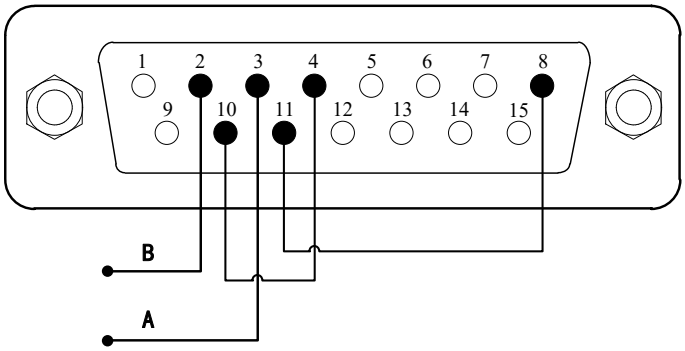




**Add:** No.1-11, East Park of Equipment Manufacturing, Yangguang Street, Xushui District, Baoding City, Hebei, China
**Tel:** +86-312-6770711
**Web:** www.leadfluid.com

# 12. Example of Communication Protocol Data Frame

## 12.1. Read Input Register

Temperature: address 1000, L or F series, 1 word length, integer variable
000000-Tx: 01 04 03 E8 00 01 B1 BA
000001-Rx: 01 04 02 00 22 39 29
Read

| | HEX |
|---|---|
| Slave address | 01 |
| Function code | 04 |
| Register High | 03 |
| Register low | E8 |
| Number of registers high | 00 |
| Number of registers low | 01 |
| CRC high bit | B1 |
| CRC low bit | BA |

Description: Address 1000（03E8）
Response

| | HEX |
|---|---|
| Slave address | 01 |
| Function code | 04 |
| Number of bytes | 02 |
| Data-high | 00 |
| Data-low | 22 |
| CRC high bit | 39 |
| CRC low bit | 29 |

Description: actual return value 34（00 22）

## 12.2. Read and Keep Registers

Flow: Address 4015, L or F series, 2 words length, single precision floating point variable, byte order CDAB (original computer mode)
000032-Tx:01 03 0F AF 00 02 F7 3E
000033-Rx:01 03 04 EF CA 42 65 1E 52
Read

| | HEX |
|---|---|
| Slave address | 01 |
| Function code | 03 |
| Register High | 0F |
| Register Low | AF |
| Number of registers high | 00 |
| Number of registers low | 02 |
| CRC high bit | F7 |
| CRC low bit | 3E |

Description: Address 4015(0F AF)


**Add:** No.1-11, East Park of Equipment Manufacturing, Yangguang Street, Xushui District, Baoding City, Hebei, China
**Tel:** +86-312-6770711
**Web:** www.leadfluid.com

Response

| | HEX |
|---|---|
| Slave address | 01 |
| Function code | 03 |
| Number of bytes | 04 |
| Data 1 high bit (4015) | EF |
| Data 1 low bit (4015) | CA |
| Data 2 high bit (4016) | 42 |
| Data 2 low bit (4016) | 65 |
| CRC high bit | 1E |
| CRC low bit | 52 |

Description: The actual return value is 57.484169 (42 65 EF CA). The byte order selected here is CDAB (original communication mode: computer mode), and the data format is data 2+data 1 to form a four-byte hexadecimal number, which needs to be converted to floating point number

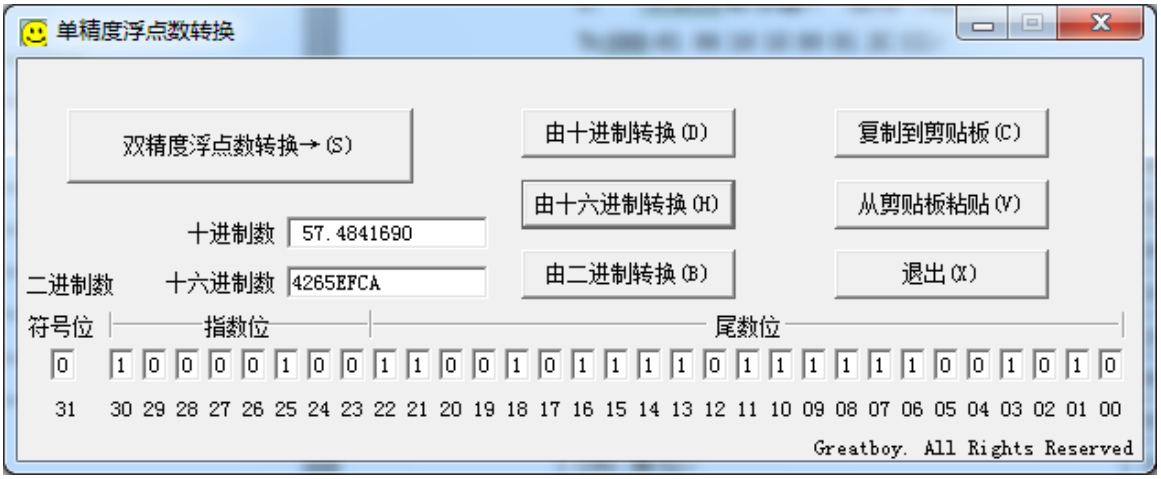


## 12.3. Write Holding Register

Start / stop: Address 4126, L or F series, 1 word length, integer variable
Tx:088-01 06 10 1E 00 01 2C CC
Rx:089-01 06 10 1E 00 01 2C CC
Write

| | HEX |
|---|---|
| Slave address | 01 |
| Function code | 06 |
| Register High | 10 |
| Register Low | 1E |
| Number of registers high | 00 |
| Number of registers low | 01 |
| CRC high bit | 2C |
| CRC low bit | CC |

Description: Address 4126 (10 1E)
Response

| | HEX |
|---|---|
| Slave address | 01 |


**Add:** No.1-11, East Park of Equipment Manufacturing, Yangguang Street, Xushui District, Baoding City, Hebei, China
**Tel:** +86-312-6770711
**Web:** www.leadfluid.com

| | |
|---|---|
| Function code | 06 |
| Register High | 10 |
| Register Low | 1E |
| Number of registers high | 00 |
| Number of registers low | 01 |
| CRC high bit | CC |
| CRC low bit | CC |

## 12.4. Write Holding Register

Flow: address 4015, L or F series, 2 word length, single-precision floating point variable, byte order CDAB (original computer mode)

Tx:000082-01 10 0F AF 00 02 04 00 00 41 20 C9 EF

Rx:000083-01 10 0F AF 00 02 72 FD

Write

| | HEX |
|---|---|
| Slave address | 01 |
| Function code | 10 |
| Register High | 0F |
| Register Low | AF |
| Number of registers high | 00 |
| Number of registers low | 02 |
| Number of bytes | 04 |
| Data 1 high bit (4015) | 00 |
| Data 1 low bit (4015) | 00 |
| Data 2 high bit (4016) | 41 |
| Data 2 low bit (4016) | 20 |
| Slave address | C9 |
| Function code | EF |

Description: Address 4015 (0F AF). Data 10.0（41 20 00 00）

Response

| | HEX |
|---|---|
| Slave address | 01 |
| Function code | 10 |
| Register High | 0F |
| Register Low | AF |
| Number of registers high | 00 |
| Number of registers low | 02 |
| CRC high bit | 72 |
| CRC low bit | FD |

Note: The byte order selected here is CDAB (original communication mode: computer mode), and the data format is data 2+data 1 to form a four-byte hexadecimal number, which needs to be converted to floating point number



**Add:** No.1-11, East Park of Equipment Manufacturing, Yangguang Street, Xushui District, Baoding City, Hebei, China
**Tel:** +86-312-6770711
**Web:** www.leadfluid.com

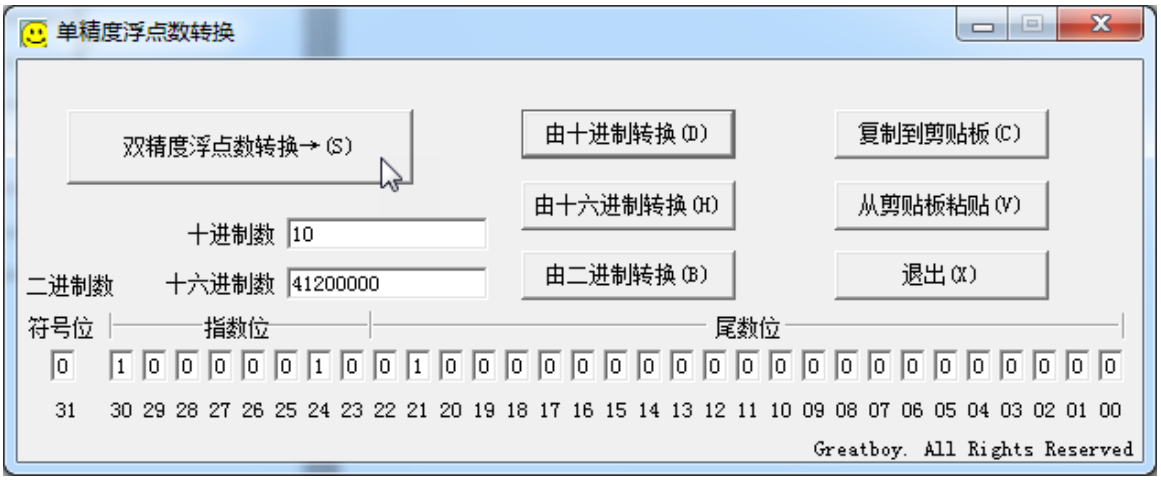


## 12.5. Read holding register

Flow: address 4015, L or F series, 2 word length, single-precision floating point variable, byte order ABCD (original PLC mode)

000032-Tx:01 03 0F AF 00 02 F7 3E

000033-Rx:01 03 04 42 65 EF CA 32 33

Read

| | HEX |
|---|---|
| Slave address | 01 |
| Function code | 03 |
| Register High | 0F |
| Register Low | AF |
| Number of registers high | 00 |
| Number of registers low | 02 |
| CRC high bit | F7 |
| CRC low bit | 3E |

Description: Address4015（0F AF）

Response

| | HEX |
|---|---|
| Slave address | 01 |
| Function code | 03 |
| Number of bytes | 04 |
| Data 1 high bit (4015) | 42 |
| Data 1 low bit (4015) | 65 |
| Data 2 high bit (4016) | EF |
| Data 2 low bit (4016) | CA |
| CRC high bit | 32 |
| CRC low bit | 33 |

Description: The actual return value is 57.484169 (42 65 EF CA).

The byte order selected here is ABCD (original communication mode: PLC mode). Its data sorting order is different from the computer mode. The data format is data 1+data 2 to form a four-byte hexadecimal number, which needs to be converted to floating point number.



**Add:** No.1-11, East Park of Equipment Manufacturing, Yangguang Street, Xushui District, Baoding City, Hebei, China
**Tel:** +86-312-6770711
**Web:** www.leadfluid.com

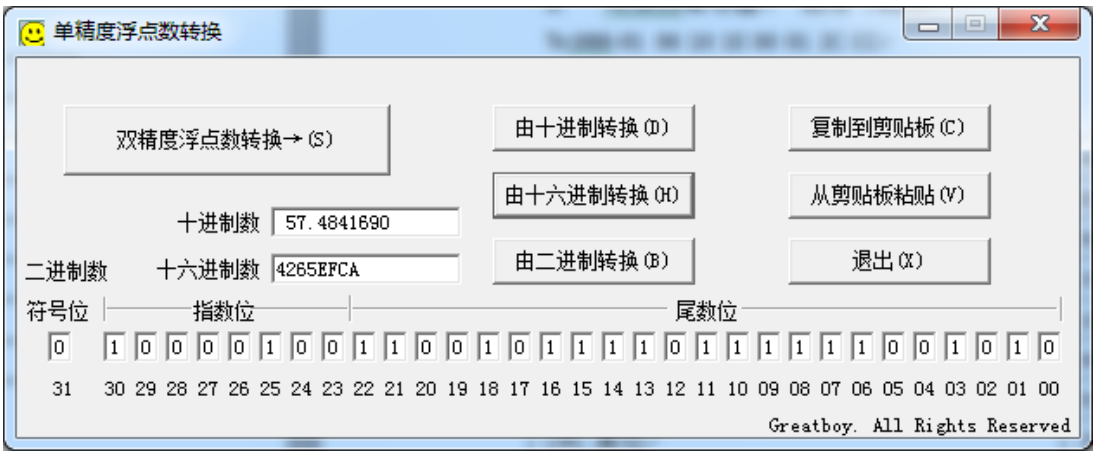


## Appendix 1: Solution of hexadecimal to single-precision floating point number

```
Union
{
float f
char   buf[4]
}data

void write_Df(u16 ndata, float df)
{
u16   d0,d1
data.f = df

d0 = (data.buf [1] << 8) + data.buf [0] ;
d1 = (data.buf [3] << 8) + data.buf [2] ;
}
```

## Appendix 2: CRC Cyclic Redundancy Check

```
unsigned char *puchMsg // To generate CRC values, point the pointer to a buffer containing binary data
unsigned short usDataLen // The number of bytes in the buffer.
unsigned short CRC16(unsigned char *puchMsg, unsigned short usDataLen)
{
      unsigned char uchCRCHi = 0xFF    /* Initialize high byte */
      unsigned char uchCRCLo = 0xFF    /* Initialize low byte */
      unsigned uIndex ; /* Put CRC table */
      while (usDataLen—) /* Via data buffer */
        {
        uIndex = uchCRCHi ^ *puchMsg++ ; /* Calculate CRC */
        uchCRCHi = uchCRCLo ^ auchCRCHi[uIndex]
        uchCRCLo = auchCRCLo[uIndex] ;
        }
```


**Add:** No.1-11, East Park of Equipment Manufacturing, Yangguang Street, Xushui District, Baoding City, Hebei, China
**Tel:** +86-312-6770711
**Web:** www.leadfluid.com

```
return (uchCRCHi << 8 | uchCRCLo)
}
// High byte table
/* Table of CRC values for high–order byte */
static unsigned char auchCRCHi[] = {
0x00, 0xC1, 0x81, 0x40, 0x01, 0xC0, 0x80, 0x41, 0x01, 0xC0, 0x80, 0x41, 0x00, 0xC1, 0x81,
0x40, 0x01, 0xC0, 0x80, 0x41, 0x00, 0xC1, 0x81, 0x40, 0x00, 0xC1, 0x81, 0x40, 0x01, 0xC0,
0x80, 0x41, 0x01, 0xC0, 0x80, 0x41, 0x00, 0xC1, 0x81, 0x40, 0x00, 0xC1, 0x81, 0x40, 0x01,
0xC0, 0x80, 0x41, 0x00, 0xC1, 0x81, 0x40, 0x01, 0xC0, 0x80, 0x41, 0x01, 0xC0, 0x80, 0x41,
0x00, 0xC1, 0x81, 0x40, 0x01, 0xC0, 0x80, 0x41, 0x00, 0xC1, 0x81, 0x40, 0x00, 0xC1, 0x81,
0x40, 0x01, 0xC0, 0x80, 0x41, 0x00, 0xC1, 0x81, 0x40, 0x01, 0xC0, 0x80, 0x41, 0x01, 0xC0,
0x80, 0x41, 0x00, 0xC1, 0x81, 0x40, 0x00, 0xC1, 0x81, 0x40, 0x01, 0xC0, 0x80, 0x41, 0x01,
0xC0, 0x80, 0x41, 0x00, 0xC1, 0x81, 0x40, 0x01, 0xC0, 0x80, 0x41, 0x00, 0xC1, 0x81, 0x40,
0x00, 0xC1, 0x81, 0x40, 0x01, 0xC0, 0x80, 0x41, 0x01, 0xC0, 0x80, 0x41, 0x00, 0xC1, 0x81,
0x40, 0x00, 0xC1, 0x81, 0x40, 0x01, 0xC0, 0x80, 0x41, 0x00, 0xC1, 0x81, 0x40, 0x01, 0xC0,
0x80, 0x41, 0x01, 0xC0, 0x80, 0x41, 0x00, 0xC1, 0x81, 0x40, 0x00, 0xC1, 0x81, 0x40, 0x01,
0xC0, 0x80, 0x41, 0x01, 0xC0, 0x80, 0x41, 0x00, 0xC1, 0x81, 0x40, 0x01, 0xC0, 0x80, 0x41,
0x00, 0xC1, 0x81, 0x40, 0x00, 0xC1, 0x81, 0x40, 0x01, 0xC0, 0x80, 0x41, 0x00, 0xC1, 0x81,
0x40, 0x01, 0xC0, 0x80, 0x41, 0x01, 0xC0, 0x80, 0x41, 0x00, 0xC1, 0x81, 0x40, 0x01, 0xC0,
0x80, 0x41, 0x00, 0xC1, 0x81, 0x40, 0x00, 0xC1, 0x81, 0x40, 0x01, 0xC0, 0x80, 0x41, 0x01,
0xC0, 0x80, 0x41, 0x00, 0xC1, 0x81, 0x40, 0x00, 0xC1, 0x81, 0x40, 0x01, 0xC0, 0x80, 0x41,
0x00, 0xC1, 0x81, 0x40, 0x01, 0xC0, 0x80, 0x41, 0x01, 0xC0, 0x80, 0x41, 0x00, 0xC1, 0x81,
0x40
}
// Low byte table
/* Table of CRC values for low–order byte */
static char auchCRCLo[] = {
0x00, 0xC0, 0xC1, 0x01, 0xC3, 0x03, 0x02, 0xC2, 0xC6, 0x06, 0x07, 0xC7, 0x05, 0xC5, 0xC4,
0x04, 0xCC, 0x0C, 0x0D, 0xCD, 0x0F, 0xCF, 0xCE, 0x0E, 0x0A, 0xCA, 0xCB, 0x0B, 0xC9, 0x09,
0x08, 0xC8, 0xD8, 0x18, 0x19, 0xD9, 0x1B, 0xDB, 0xDA, 0x1A, 0x1E, 0xDE, 0xDF, 0x1F, 0xDD,
0x1D, 0x1C, 0xDC, 0x14, 0xD4, 0xD5, 0x15, 0xD7, 0x17, 0x16, 0xD6, 0xD2, 0x12, 0x13, 0xD3,
0x11, 0xD1, 0xD0, 0x10, 0xF0, 0x30, 0x31, 0xF1, 0x33, 0xF3, 0xF2, 0x32, 0x36, 0xF6, 0xF7,
0x37, 0xF5, 0x35, 0x34, 0xF4, 0x3C, 0xFC, 0xFD, 0x3D, 0xFF, 0x3F, 0x3E, 0xFE, 0xFA, 0x3A,
0x3B, 0xFB, 0x39, 0xF9, 0xF8, 0x38, 0x28, 0xE8, 0xE9, 0x29, 0xEB, 0x2B, 0x2A, 0xEA, 0xEE,
0x2E, 0x2F, 0xEF, 0x2D, 0xED, 0xEC, 0x2C, 0xE4, 0x24, 0x25, 0xE5, 0x27, 0xE7, 0xE6, 0x26,
0x22, 0xE2, 0xE3, 0x23, 0xE1, 0x21, 0x20, 0xE0, 0xA0, 0x60, 0x61, 0xA1, 0x63, 0xA3, 0xA2,
0x62, 0x66, 0xA6, 0xA7, 0x67, 0xA5, 0x65, 0x64, 0xA4, 0x6C, 0xAC, 0xAD, 0x6D, 0xAF, 0x6F,
0x6E, 0xAE, 0xAA, 0x6A, 0x6B, 0xAB, 0x69, 0xA9, 0xA8, 0x68, 0x78, 0xB8, 0xB9, 0x79, 0xBB,
0x7B, 0x7A, 0xBA, 0xBE, 0x7E, 0x7F, 0xBF, 0x7D, 0xBD, 0xBC, 0x7C, 0xB4, 0x74, 0x75, 0xB5,
0x77, 0xB7, 0xB6, 0x76, 0x72, 0xB2, 0xB3, 0x73, 0xB1, 0x71, 0x70, 0xB0, 0x50, 0x90, 0x91,
0x51, 0x93, 0x53, 0x52, 0x92, 0x96, 0x56, 0x57, 0x97, 0x55, 0x95, 0x94, 0x54, 0x9C, 0x5C,
0x5D, 0x9D, 0x5F, 0x9F, 0x9E, 0x5E, 0x5A, 0x9A, 0x9B, 0x5B, 0x99, 0x59, 0x58, 0x98, 0x88,
0x48, 0x49, 0x89, 0x4B, 0x8B, 0x8A, 0x4A, 0x4E, 0x8E, 0x8F, 0x4F, 0x8D, 0x4D, 0x4C, 0x8C,
0x44, 0x84, 0x85, 0x45, 0x87, 0x47, 0x46, 0x86, 0x82, 0x42, 0x43, 0x83, 0x41, 0x81, 0x80,
0x40
}
```



**Add:** No.1-11, East Park of Equipment Manufacturing, Yangguang Street, Xushui District, Baoding City, Hebei, China
**Tel:** +86-312-6770711
**Web:** www.leadfluid.com

# Appendix 3: Syringe Number Reference List

| No. | Brand | Capacity | Diameter(mm) |
|---|---|---|---|
| 0 | Custom | Custom | Custom |
| 1 | BD Glass | 0.5mL | 4.64 |
| 2 | BD Glass | 1mL | 4.64 |
| 3 | BD Glass | 2.5mL | 8.66 |
| 4 | BD Glass | 5mL | 11.86 |
| 5 | BD Glass | 10mL | 14.43 |
| 6 | BD Glass | 20mL | 19.13 |
| 7 | BD Glass | 30mL | 22.7 |
| 8 | BD Glass | 50mL | 28.6 |
| 9 | BD Glass | 100mL | 34.9 |
| 10 | BD Plastic | 1mL | 4.699 |
| 11 | BD Plastic | 3mL | 8.585 |
| 12 | BD Plastic | 5mL | 11.989 |
| 13 | BD Plastic | 10mL | 14.427 |
| 14 | BD Plastic | 20mL | 19.05 |
| 15 | BD Plastic | 30mL | 21.59 |
| 16 | BD Plastic | 50mL | 26.594 |
| 17 | BD Plastic | 60mL | 26.594 |
| 18 | Cadence | 0.25mL | 3.47 |
| 19 | Cadence | 0.5mL | 3.62 |
| 20 | Cadence | 1mL | 4.82 |
| 21 | Cadence | 2mL | 8.91 |
| 22 | Cadence | 3mL | 8.91 |
| 23 | Cadence | 5mL | 11.71 |
| 24 | Cadence | 10mL | 14.65 |
| 25 | Cadence | 20mL | 19.56 |
| 26 | Cadence | 30mL | 22.7 |
| 27 | Cadence | 50mL | 28.02 |
| 28 | Cadence | 100mL | 35.7 |
| 29 | Hamilton | 0.5uL | 0.103 |
| 30 | Hamilton | 1uL | 0.146 |
| 31 | Hamilton | 2uL | 0.206 |
| 32 | Hamilton | 5uL | 0.343 |
| 33 | Hamilton | 10uL | 0.485 |


**Add:** No.1-11, East Park of Equipment Manufacturing, Yangguang Street, Xushui District, Baoding City, Hebei, China
**Tel:** +86-312-6770711
**Web:** www.leadfluid.com

| | | | |
|---|---|---|---|
| 34 | Hamilton | 25uL | 0.729 |
| 35 | Hamilton | 50uL | 1.03 |
| 36 | Hamilton | 100uL | 1.457 |
| 37 | Hamilton | 250uL | 2.304 |
| 38 | Hamilton | 500uL | 3.256 |
| 39 | Hamilton | 1mL | 4.608 |
| 40 | Hamilton | 1.25mL | 5.151 |
| 41 | Hamilton | 2.5mL | 7.285 |
| 42 | Hamilton | 5mL | 10.3 |
| 43 | Hamilton | 10mL | 14.567 |
| 44 | Hamilton | 25mL | 23.033 |
| 45 | Hamilton | 50mL | 32.573 |
| 46 | Hamilton | 100mL | 32.573 |
| 47 | Airtite | 1mL | 4.69 |
| 48 | Airtite | 2.5mL | 9.65 |
| 49 | Airtite | 5mL | 12.45 |
| 50 | Airtite | 10mL | 15.9 |
| 51 | Airtite | 20mL | 20.05 |
| 52 | Airtite | 30mL | 22.9 |
| 53 | Airtite | 50mL | 29.2 |
| 54 | SGE Glass | 5uL | 0.343 |
| 55 | SGE Glass | 10uL | 0.485 |
| 56 | SGE Glass | 25uL | 0.728 |
| 57 | SGE Glass | 50uL | 1.03 |
| 58 | SGE Glass | 100uL | 1.457 |
| 59 | SGE Glass | 250uL | 2.303 |
| 60 | SGE Glass | 500uL | 3.257 |
| 61 | SGE Glass | 1mL | 4.606 |
| 62 | SGE Glass | 2.5mL | 7.284 |
| 63 | SGE Glass | 5mL | 10.301 |
| 64 | SGE Glass | 10mL | 14.567 |
| 65 | SGE Glass | 25mL | 23 |
| 66 | SGE Glass | 50mL | 27.5 |
| 67 | SGE Glass | 100mL | 35 |
| 68 | Sherwood | 1mL | 4.65 |
| 69 | Sherwood | 3mL | 8.94 |
| 70 | Sherwood | 6mL | 12.7 |


**Add:** No.1-11, East Park of Equipment Manufacturing, Yangguang Street, Xushui District, Baoding City, Hebei, China
**Tel:** +86-312-6770711
**Web:** www.leadfluid.com

| | | | |
|---|---|---|---|
| 71 | Sherwood | 12mL | 15.9 |
| 72 | Sherwood | 20mL | 20.4 |
| 73 | Sherwood | 35mL | 23.8 |
| 74 | Sherwood | 60mL | 26.6 |
| 75 | Sherwood | 140mL | 38.4 |
| 76 | Terumo | 1mL | 4.7 |
| 77 | Terumo | 3mL | 8.95 |
| 78 | Terumo | 5mL | 13 |
| 79 | Terumo | 10mL | 15.8 |
| 80 | Terumo | 20mL | 20.15 |
| 81 | Terumo | 30mL | 23.1 |
| 82 | Terumo | 60mL | 29.1 |
| 83 | LF Class | 1mL | 6.716 |
| 84 | LF Class | 2mL | 8.925 |
| 85 | LF Class | 5mL | 11.732 |
| 86 | LF Class | 10mL | 14.678 |
| 87 | LF Class | 20mL | 19.601 |
| 88 | LF Class | 30mL | 22.691 |
| 89 | LF Class | 50mL | 28.04 |

# Appendix 4: LF Series V1 Peristaltic Pump Head, Tubing Reference List

| No. | Pump Head | Tubing |
|---|---|---|
| 0 | DG6 | ID0.13 |
| 1 | DG6 | ID0.25 |
| 2 | DG6 | ID0.5 |
| 3 | DG6 | ID0.76 |
| 4 | DG6 | ID1.00 |
| 5 | DG6 | ID1.22 |
| 6 | DG6 | ID1.52 |
| 7 | DG6 | ID1.65 |
| 8 | DG6 | ID2.00 |
| 9 | DG6 | ID2.40 |
| 10 | DG6 | ID2.79 |
| 11 | DG6 | ID3.17 |
| 12 | DT10 | ID0.13 |
| 13 | DT10 | ID0.25 |
| 14 | DT10 | ID0.5 |


**Add:** No.1-11, East Park of Equipment Manufacturing, Yangguang Street, Xushui District, Baoding City, Hebei, China
**Tel:** +86-312-6770711
**Web:** www.leadfluid.com

| | | |
|---|---|---|
| 15 | DT10 | ID0.76 |
| 16 | DT10 | ID1.00 |
| 17 | DT10 | ID1.22 |
| 18 | DT10 | ID1.52 |
| 19 | DT10 | ID1.65 |
| 20 | DT10 | ID2.00 |
| 21 | DT10 | ID2.40 |
| 22 | DT10 | ID2.79 |
| 23 | DT10 | ID3.17 |
| 24 | DT10 | 13# |
| 25 | DT10 | 14# |
| 26 | DT15 | 19# |
| 27 | DT15 | 16# |
| 28 | DT15 | 25# |
| 29 | DT15 | 17# |
| 30 | YZ15 | 13# |
| 31 | YZ15 | 14# |
| 32 | YZ15 | 19# |
| 33 | YZ15 | 16# |
| 34 | YZ15 | 25# |
| 35 | YZ15 | 17# |
| 36 | YZ15 | 18# |
| 37 | WMD15 | 13# |
| 38 | WMD15 | 14# |
| 39 | WMD15 | 19# |
| 40 | WMD15 | 16# |
| 41 | WMD15 | 25# |
| 42 | WMD15 | 17# |
| 43 | WMD15 | 18# |
| 44 | YT25 | 15# |
| 45 | YT25 | 24# |
| 46 | YT25 | 35# |
| 47 | YT25 | 36# |
| 48 | GN10 | ID2.48 |
| 49 | GN10 | ID4.48 |
| 50 | DMD15 | 13# |
| 51 | DMD15 | 14# |
| 52 | DMD15 | 19# |
| 53 | DMD15 | 16# |
| 54 | DMD15 | 25# |


**Add:** No.1-11, East Park of Equipment Manufacturing, Yangguang Street, Xushui District, Baoding City, Hebei, China
**Tel:** +86-312-6770711
**Web:** www.leadfluid.com

# Appendix 5: LF Series V3 Peristaltic Pump Head, Tubing Reference List

| No. | Pump Head | Tubing |
|---|---|---|
| 0 | DG6 | ID0.13 |
| 1 | DG6 | ID0.25 |
| 2 | DG6 | ID0.5 |
| 3 | DG6 | ID0.76 |
| 4 | DG6 | ID1.00 |
| 5 | DG6 | ID1.22 |
| 6 | DG6 | ID1.52 |
| 7 | DG6 | ID1.65 |
| 8 | DG6 | ID2.00 |
| 9 | DG6 | ID2.40 |
| 10 | DG6 | ID2.79 |
| 11 | DG6 | ID3.00 |
| 12 | DG6 | ID3.17 |
| 13 | DT10 | ID0.13 |
| 14 | DT10 | ID0.25 |
| 15 | DT10 | ID0.5 |
| 16 | DT10 | ID0.76 |
| 17 | DT10 | ID1.00 |
| 18 | DT10 | ID1.22 |
| 19 | DT10 | ID1.52 |
| 20 | DT10 | ID1.65 |
| 21 | DT10 | ID2.00 |
| 22 | DT10 | ID2.40 |
| 23 | DT10 | ID2.79 |
| 24 | DT10 | ID3.00 |
| 25 | DT10 | ID3.17 |
| 26 | DT10 | 13# |
| 27 | DT10 | 14# |
| 28 | YZ15 | 13# |
| 29 | YZ15 | 14# |
| 30 | YZ15 | 19# |
| 31 | YZ15 | 16# |
| 32 | YZ15 | 25# |
| 33 | YZ15 | 17# |
| 34 | YT15 | 13# |
| 35 | YT15 | 14# |
| 36 | YT15 | 19# |
| 37 | YT15 | 16# |
| 38 | YT15 | 25# |
| 39 | YT15 | 17# |


**Add:** No.1-11, East Park of Equipment Manufacturing, Yangguang Street, Xushui District, Baoding City, Hebei, China
**Tel:** +86-312-6770711
**Web:** www.leadfluid.com

| | | |
|---|---|---|
| 40 | YT15 | 18# |
| 41 | WMD15 | 13# |
| 42 | WMD15 | 14# |
| 43 | WMD15 | 19# |
| 44 | WMD15 | 16# |
| 45 | WMD15 | 25# |
| 46 | WMD15 | 17# |
| 47 | WMD15 | 18# |
| 48 | YZ25 | 15# |
| 49 | YZ25 | 24# |
| 50 | YT25 | 15# |
| 51 | YT25 | 24# |
| 52 | YT25 | 35# |
| 53 | YT25 | 36# |
| 54 | YZ25 | 114# |
| 55 | YZ25 | 116# |
| 56 | KZ25 | 15# |
| 57 | KZ25 | 24# |
| 58 | KZ25 | 35# |
| 59 | KZ25 | 36# |
| 60 | DMD25 | 15# |
| 61 | DMD25 | 24# |
| 62 | DMD25 | 35# |
| 63 | DMD25 | 36# |
| 64 | YZ35 | 73# |
| 65 | YZ35 | 82# |
| 66 | DG10 | ID0.13 |
| 67 | DG10 | ID0.25 |
| 68 | DG10 | ID0.5 |
| 69 | DG10 | ID0.76 |
| 70 | DG10 | ID1.00 |
| 71 | DG10 | ID1.22 |
| 72 | DG10 | ID1.52 |
| 73 | DG10 | ID2.40 |
| 74 | DG10 | ID2.79 |
| 75 | DG10 | ID3.17 |
| 76 | NULL | NULL |
| 77 | DT15 | 19# |
| 78 | DT15 | 16# |
| 79 | DT15 | 25# |
| 80 | DT15 | 17# |
| 81 | YT25 | 114# |
| 82 | YT25 | 116# |
| 83 | GN10 | ID2.48 |
| 84 | GN10 | ID4.48 |


**Add:** No.1-11, East Park of Equipment Manufacturing, Yangguang Street, Xushui District, Baoding City, Hebei, China
**Tel:** +86-312-6770711
**Web:** www.leadfluid.com

| | | |
|---|---|---|
| 85 | YZ15 | 18# |
| 86 | FT1524 | 13# |
| 87 | FT1524 | 14# |
| 88 | FT1524 | 19# |
| 89 | FT1524 | 16# |
| 90 | FT1524 | 25# |
| 91 | FT1524 | 17# |
| 92 | FT1524 | 18# |
| 93 | YZ25 | 119# |
| 94 | YT25 | 119# |
| 95 | DMD25 | 114# |
| 96 | DMD25 | 119# |
| 97 | DMD25 | 116# |
| 98 | DMD15 | 13# |
| 99 | DMD15 | 14# |
| 100 | DMD15 | 19# |
| 101 | DMD15 | 16# |
| 102 | DMD15 | 25# |


**Add:** No.1-11, East Park of Equipment Manufacturing, Yangguang Street, Xushui District, Baoding City, Hebei, China
**Tel:** +86-312-6770711
**Web:** www.leadfluid.com